EMERGENCY LED DRIVER

BLD-YM04S-056A BLD-YM08S-056A BLD-YM15S-056A BLD-YM20S-056A BLD-YM25S-056A
BLD-YM04S-300A BLD-YM08S-300A BLD-YM15S-300A BLD-YM20S-300A BLD-YM25S-300A



CONSTANT POWER EMERGENCY OUTPUT

SELF TEST

c UL us LISTED E519224

FEATURES

- Split design,external battery for flexible installation and narrow space.
- Constant output power. Self-testing.
- Long life high temperature recyclable LiFePO4 battery, meet 2000 cycles of charge and discharge.
- Includes 2-in 1 test switch and charge indicator light.
- 5 year limited warranty.
- Suitable for use in dry and damp location.
- UL Listed for factory or field installation-UL924 & CSAC22.2 NO.141.
- California Energy Commission (CEC) T20 with BC.

ELECTRICAL SPECIFICATIONS

- Input Voltage:100-347Vac,50/60Hz
- Input Current: 100mA max
- Input Power: 8W max
- Output Power: 4W/8W/15W/20W/25W
- Recharge Time: 24 Hours
- Discharge Time: 90 minutes
- Battery: LiFePO4 battery
- Battery Charging Current: ≤350mA
- Ambient Temp: 5°C to 60°C (41°F to 140°F)

ORDERING GUIDE

Model Number	Input Voltage	Output Voltage	Output Power	Charging Time	Discharging Time	Battery Type
BLD-YM04S-056A	100-347V AC, 50/60Hz	25-56Vdc	4W	24 Hours	90 minutes	LiFePO4 battery
BLD-YM08S-056A			8W			
BLD-YM15S-056A			15W			
BLD-YM20S-056A			20W			
BLD-YM25S-056A			25W			
BLD-YM04S-300A		60-300Vdc	4W			
BLD-YM08S-300A			8W			
BLD-YM15S-300A			15W			
BLD-YM20S-300A			20W			
BLD-YM25S-300A			25W			

DIMENSIONS

Driver- 5.87"x1.75"x1.01"(149mmx44.5mmx25.6mm) mounting center-5.44"

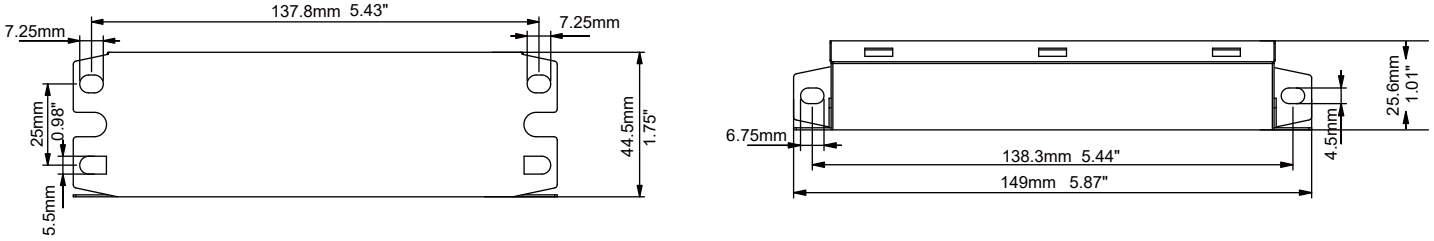

EMERGENCY LED DRIVER

BLD-YM04S-056A BLD-YM08S-056A BLD-YM15S-056A BLD-YM20S-056A BLD-YM25S-056A
BLD-YM04S-300A BLD-YM08S-300A BLD-YM15S-300A BLD-YM20S-300A BLD-YM25S-300A

BATTERY DIMENSIONS

4W Battery case- 3.39"x1.61"x0.98"(86.2mmx40.8mmx23mm)
mounting center-3.12"

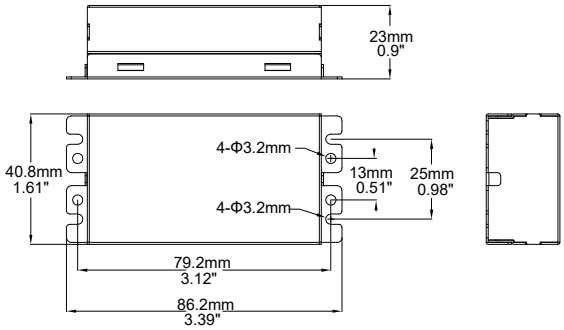

8W Battery case- 6.1"x1.2"x1.18"(155mmx30.5mmx30mm)
mounting center-5.83"

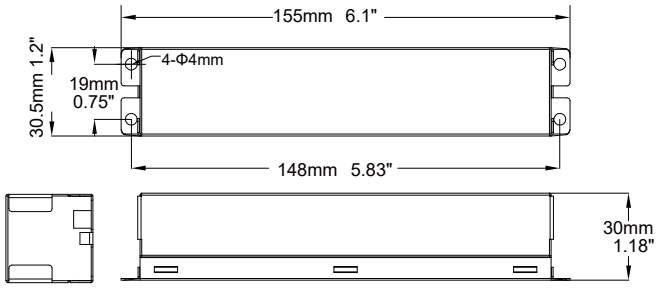

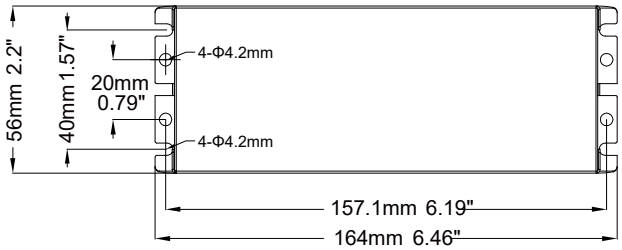

15W/20W/25W Battery case- 6.46"x2.2"x1.22"
164mmx56mmx31mm
mounting center-6.19"

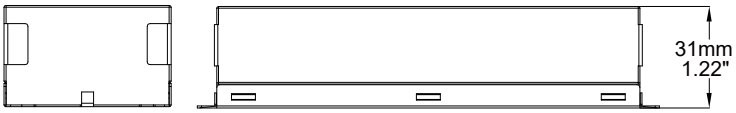

OPTIONAL TEST SWITCH

Metal Test Switch:

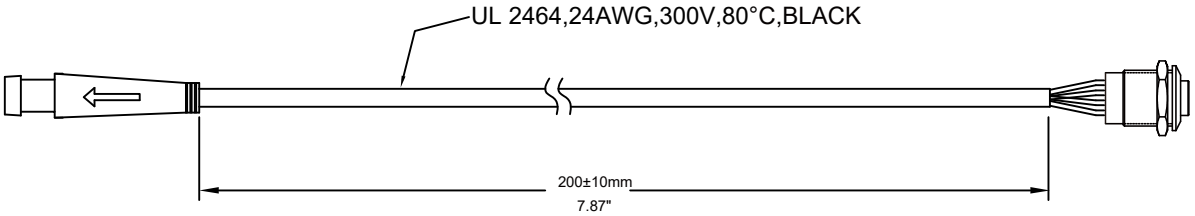

Skinny Film Test Switch:

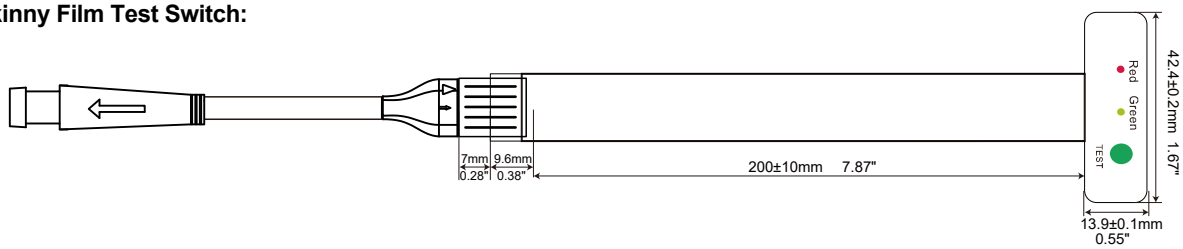

2 In 1 Plastic Test Switch:

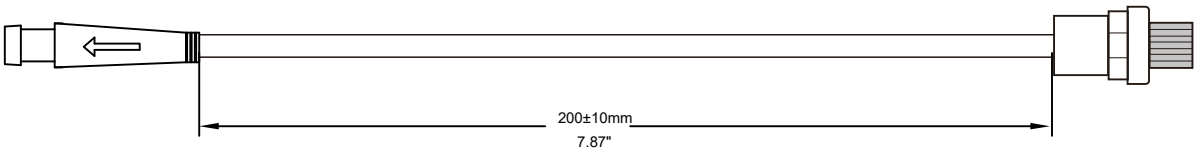

EMERGENCY LED DRIVER

BLD-YM04S-056A BLD-YM08S-056A BLD-YM15S-056A BLD-YM20S-056A BLD-YM25S-056A
BLD-YM04S-300A BLD-YM08S-300A BLD-YM15S-300A BLD-YM20S-300A BLD-YM25S-300A

OPERATION

AC Mode: AC power is present, the LED load from the LED driver is normal power supply, AC LED driver output current can not exceed 250W or 4A, the emergency driver is charging in a standby mode.

Emergency Mode: When AC power fails, the emergency driver automatically switches to emergency mode, operating the LEDs for a minimum of 90 minutes. When AC power is restored, the emergency driver switches the system back to the normal mode and restores to the battery charging state.

SELF-TESTING

The integrated Self- Diagnostic circuitry will automatically conduct monthly 30-second and annual 90-minute tests to verify proper emergency capability per Life Safety Code requirements. NFPA 101, Life Safety Code Outines the following schedule.

Monthly: During AC mode, the system conducts a (30)seconds self-discharge test of the emergency led driver every 30 days. And automatically restore to normal charging after (30)seconds dis-charged.

Annually: During AC mode, the system conducts a (90)minutes self-discharge test of the emergency led driver every 360 days And automatically restore to normal charging after fully dis-charged.



Indicator Light Introduction

① Red/ON: Charging
② Green/ON: Full-charged
③ Indicator light OFF: Discharging (emergency mode)
④ Green/Flashing: Self-Testing
⑤ Red Flashing:Error

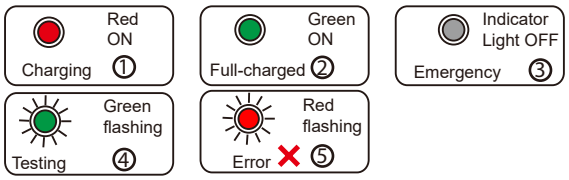

MANUAL TEST

Test Mode	Description	Action	Status	Quit
Fast Test	quick discharge test	press the test button 1 time	LED load will light up for 5s	/
Monthly	30 second test	press the test button 3s continuously	LED load will light up for 30s	Hold the test button/switch for 1s
Annually	90 minute test	press the test button 6s continuously	LED load will light up for 90 minutes	Hold the test button/switch for 1s
Suspend Function	transportation/storage/ disconnecting the battery,etc	during annually test, press the test button 2 times continuously	shut off the power function	powered on again

WIRING DIAGRAM

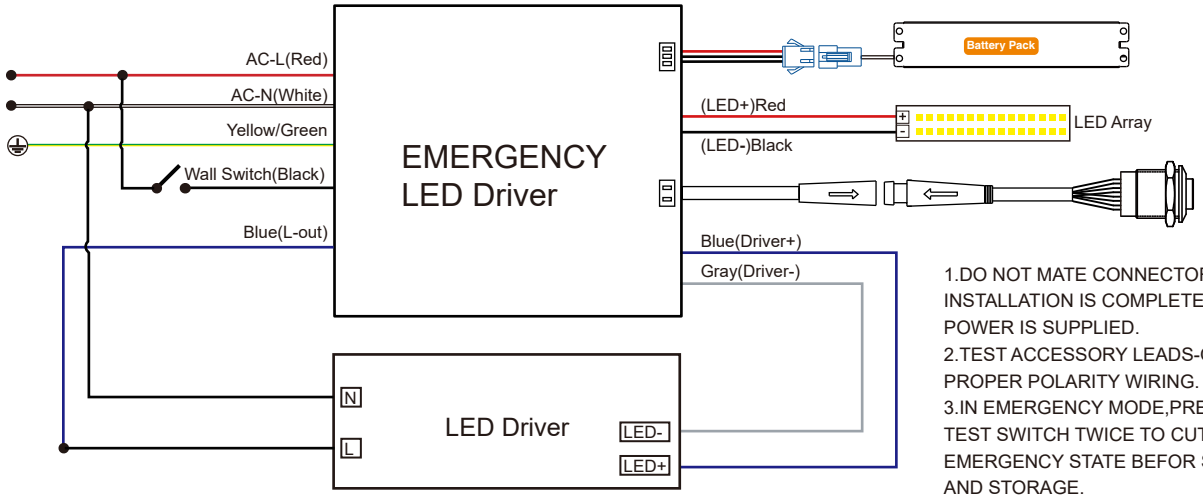

1.DO NOT MATE CONNECTOR UNTIL INSTALLATION IS COMPLETE AND AC POWER IS SUPPLIED.
2.TEST ACCESSORY LEADS-OBSERVE PROPER POLARITY WIRING.
3.IN EMERGENCY MODE,PRESS TEST SWITCH TWICE TO CUT OFF THE EMERGENCY STATE BEFOR SHIPMENT AND STORAGE.

INSTRUCTION MANUAL

IMPORTANT SAFEGUARDS

When using electrical equipment, basic safety precautions should always be followed including the following:



CAUTION:Before installation, make certain the AC power is off.

READ AND FOLLOW ALL SAFETY INSTRUCTIONS.

- CAUTION: This emergency LED driver provides more than one power supply output source.To reduce the risk of electrical shock, servicing of this equipment should be performed by qualified personnel only.
- CAUTION: Do not connect the battery pack connector until all other wiring are complete and AC power is on.
- CAUTION: This emergency LED driver requires an un-switched AC power source of 100-347Vac,50/60Hz .The AC driver must be on the same branch circuit as the emergency LED driver. Ambient temperature: 5°C to 60°C.
- CAUTION: The use of accessory equipment not recommended by the manufacturer may cause an unsafe condition, void warranty, and result in non-compliance with UL specifications.
- CAUTION: Use with grounded, UL listed, dry, or damp location-rated fixtures, and the case should be grounded.
- CAUTION: Do not use outdoors.Do not mount near gas or electric heaters.
- CAUTION- Do not attempt to service the battery. A sealed, non-maintenance battery is used that is not field replaceable. Replace the entire unit when necessary.
- CAUTION: Do not use this equipment for other than its intended use. The emergency LED driver is not for in an air-handling fixture.
- CAUTION: The emergency LED driver should be mounted in locations and at heights where it will not be subjected to tampering by unauthorized personnel.
- IMPORTANT: Please charge the battery consistently for >24 hours for the first time usage to activate the whole battery cells of discharging/charging duration.
- IMPORTANT: Customers are advised to charge emergency LED drivers 24 hours every 6 months during storage, which could be stocked for 1 year at most. If customers don't install and recharge for more than 1 year, the batteries may be damaged. This is not covered in the warranty, and we would charge for replacement.
- IMPORTANT: Lighting fixture manufacturers, electricians, and end-users need to ensure product system compatibility test before using and final installation.

c UL US
LISTED

LiFePO4

THIS PRODUCT CONTAINS A RECHARGEABLE LIFEPO4 BATTERY.
THE BATTERY MUST BE RECYCLED OR DISPOSED OFF PROPERLY.