BillDa®
EMERGENCY POWER LEADER

BLD-TM23X
EMERGENCY LED DRIVER

AC120V Output Pure sine wave



c UL us LISTED E519224

BC

RoHS

HIGH VOLTAGE OUTPUT
120V AC

FEATURES

- UL listed for factory or field installation-UL924 & CSA C22.2 NO.141.
- Compliance with NFPA 101 life Safety Code, CEC (CA Title 20) and US DOE energy efficiency.
- Pure sine wave output AC120V,good compatibility.
- Easy wiring: directly connect to AC INPUT OF LED Driver.
- Monthly/annual self-testing.
- 2-in 1 test switch and dual-color indicator light included.
- 5 years warranty

SPECIFICATIONS

- Input Voltage:100~277Vac,50/60Hz
- Input Current: ≤150mA
- Input Power: 9W max
- Output Voltage: AC 120V
- Emergency Power: 15W/18W/23W
- Recharge Time: 24Hrs
- Discharge Time: 1.5H
- Battery: Li-ion/LiFePO4 Battery
- Ambient Temp: Li-ion:5°C to 50°C(41°F to 122°F)
  LiFePO4:5°C to 60°C(41°F to 140°F)

ORDERING GUIDE

Model Number	Input Voltage	Output Voltage	Output Power	Emergency Time	Recharge Time	Battery Type
BLD-TM23D-ACSF	100-277V AC 50/60Hz	***AC 120V***	15W/18W/23W	1.5H	24Hrs	LiFePO4 Battery
BLD-TM23D-ACS						
BLD-TM23H-ACSF	100-277V AC 50/60Hz	***AC 120V***	15W/18W/23W	1.5H	24Hrs	Li-ion Battery
BLD-TM23H-ACS						
BLD-TM23H-ACDF						
BLD-TM23H-ACD						

Model Difference:

Models BLD-TM23D-ACSF and BLD-TM23D-ACS are similar, LiFePO4 Battery,except:
BLD-TM23D-ACSF with single flexible conduit, BLD-TM23D-ACS without flexible conduit.

Models BLD-TM23H-ACSFand BLD-TM23H-ACS are similar, Li-ion Battery,except:
BLD-TM23H-ACSF with single flexible conduit, BLD-TM23H-ACS without flexible conduit.

Models BLD-TM23H-ACDF and BLD-TM23H-ACD are similar, Li-ion Battery,except:
BLD-TM23H-ACDF with dual flexible conduit, BLD-TM23H-ACD without flexible conduit.

BLD-TM23X
EMERGENCY LED DRIVER

DIMENSIONS

Driver-15"x2.24"x1.3"(382mmx55mmx33mm) Mounting center-14.39"(365.5mm)

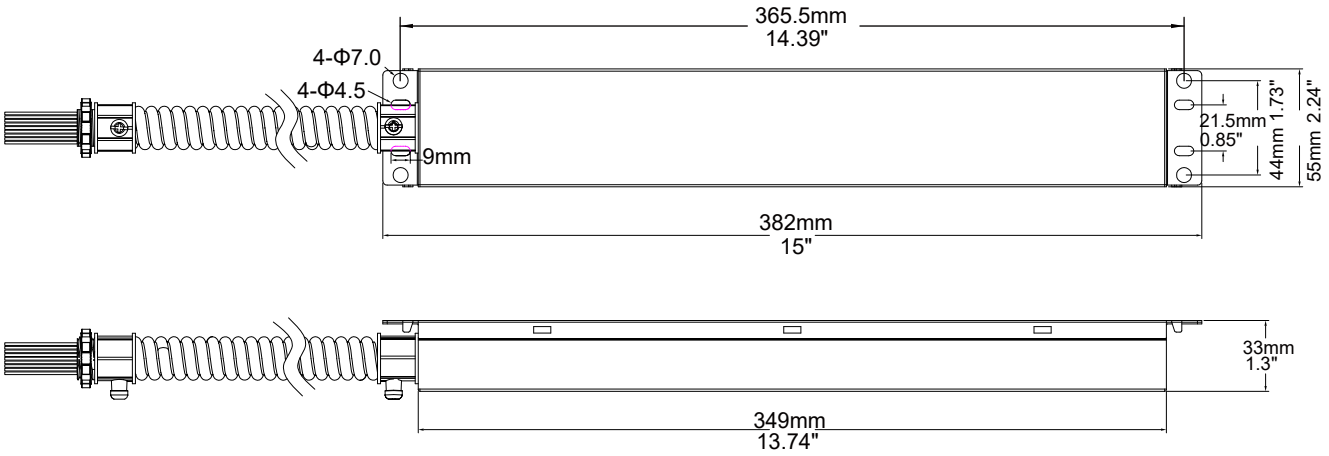

OPTIONAL ACCESSORIES

Test Plate:

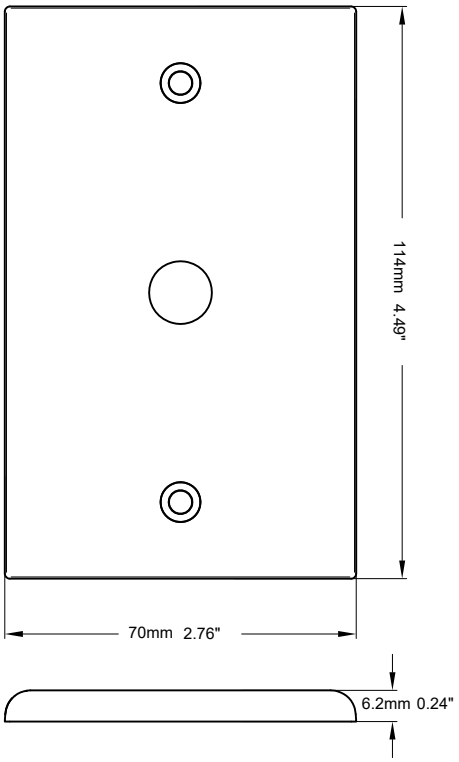

2 In 1 Plastic Test Switch:

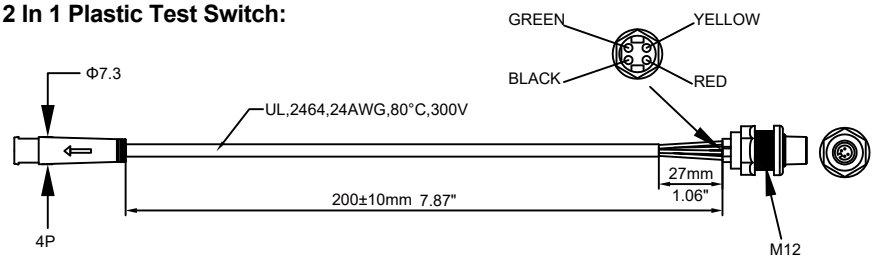

M12 Metal Test Switch:

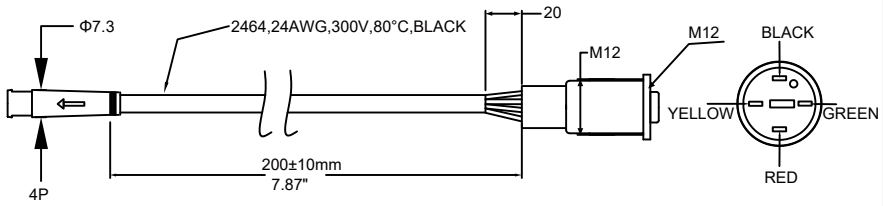

Skinny Film Test Switch:

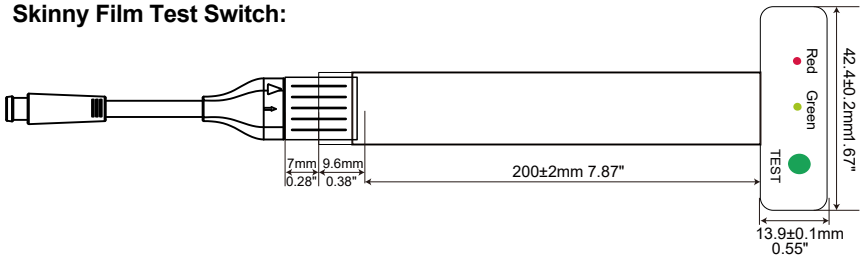

BLD-TM23X
EMERGENCY LED DRIVER

INSTRUCTION MANUAL

IMPORTANT SAFEGUARDS

When using electrical equipment, basic safety precautions should always be followed, including the following:

READ AND FOLLOW ALL SAFETY INSTRUCTIONS.

CAUTION: RISK OF SHOCK-disconnect emergency and normal input power sources before servicing any equipment connected to this unit.

CAUTION: Risk of fire or electric shock-This emergency battery pack installation requires knowledge of luminaire and electrical systems.

CAUTION: Servicing of this equipment should be performed by qualified personnel only.

CAUTION: Before installation, make certain the AC power to fixture is off.

CAUTION: Verify that all replacement lamp types marked on the installed luminaire are also identified as suitable for use with this emergency battery pack.

CAUTION: Suitable for use in (Li-ion:5°C to 50°C/LiFePO4:5°C to 60°C) ambient temperatures.

CAUTION: Do not use outdoors. Do not mount near gas or electric heaters.

CAUTION: Equipment should be mounted in locations and at heights where it will not be subjected to tampering by unauthorized personnel.

CAUTION: The use of accessory equipment is not recommended by the manufacturer may cause an unsafe condition.

CAUTION: The emergency battery pack is not for in an air-handling fixture.

CAUTION: Do not use this equipment for other than its intended use.

TESTING SYSTEM: The emergency battery requires a charge minimum of one (1) hour before testing the circuit. A full charge requires twenty-four (24) hours.

IMPORTANT: An unswitched AC power source is required (100-277V AC, 50/60 Hz). This device is designed for fixtures listed for dry and damp locations.

IMPORTANT: Please charge the battery consistently for >24 hours for the first time usage so as to activate the whole battery cells of discharging/charging duration.

IMPORTANT: Customers are advised to charge emergency LED drivers 24 hours every 6 months during storage,and which could be stocked for 1 year at most. If customers don't install and recharge for more than 1 year, the batteries may be damaged. This is not covered in the warranty, and we would charge for replacement.

IMPORTANT: Lighting fixture manufacturers, electricians, and end-users need to ensure product system compatibility test before using and final installation.

c UL US
LISTED

Li-ion/LiFePO4

THIS PRODUCT CONTAINS A RECHARGEABLE Li-ion/LiFePO4 BATTERY.
THE BATTERY MUST BE RECYCLED OR DISPOSED OFF PROPERLY.

OPERATION

Normal Mode: AC power is present. The AC driver operates the LED load as designed. The emergency driver is charging in a standby mode. The charging indicator light is red, showing that the battery is charging.

Emergency Mode: When the AC power goes out, the emergency driver detects the AC power outage and automatically switch to emergency mode. The LED luminaire is illuminated for a minimum of 90 minutes.
When the AC power is restored, the emergency driver switches the system back to the Normal Mode and resumes battery charging.

SELF-TEST:

This unit contains a control/monitor circuit that if enabled automatically performs a 30-second discharge test once a month and a full 90-minute discharge test once a year. During routine testing, the self-testing emergency driver simulates an AC power failure causing the unit to automatically switch to emergency mode. The unit will monitor the operation of the LED load, battery voltage, and emergency duration. If the emergency system functions properly, then the unit will return to normal mode. Should the unit detect any problems, the indicator light will flash per failure condition (see Troubleshooting Guide) until the condition has been corrected and the unit passes the next test.

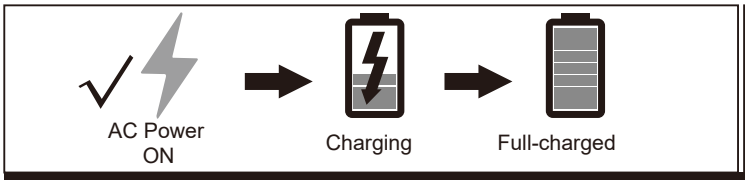

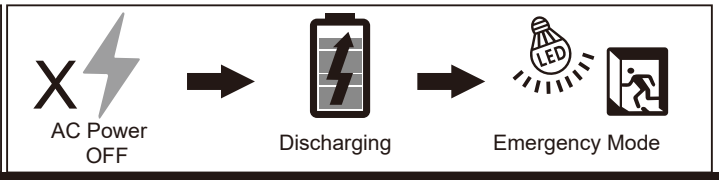

Indicator Light Introduction

① Red/ON: Charging
② Green/ON: Full-charged
③ Indicator light OFF: Discharging (emergency mode)
④ Green/Flashing: Self-Testing
⑤ Red Flashing:Error

Note: See Trouble Shooting Guide

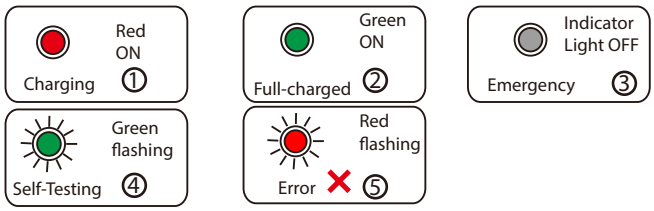

TEST SWITCH INDICATOR STATUS & TROUBLE SHOOTING GUIDE

The charge indicator will be lit Solid Red when charging, and will be lit Solid Green when fully charged and in the standby mode. The indicator will flash Green when self-testing. If a problem is encountered during the test cycle, the indicator will flash Red, according to the diagnostic codes below:

Mode	LED Indicators Status	Error	EM Driver Status / Mode	Corrective Action
Normal Mode	Solid Red	None	Battery is charging	/
	Solid Green	None	Battery fully charged/System OK	/
	None.Both LEDs OFF	None	In EM mode or emergency run-time is ended	/
	Flashing Green	None	Self-Diagnostic test underway	/
Fault Mode	Very slow Flashing Red	LED Load	1. LED output load is short circuit / Over Current / Open load in EM Mode. 2. Output circuit failure in EM mode.	Check if there is a short circuit,over current, or open circuit in the output connection.
	Red Flashing×2	Charging	/	1. Check input AC mains wiring of Unswitched Hot,Neutral and Ground. 2.Verify Voltage and Frequency are stable and match the input rating.
	Red Flashing×3	Battery	Battery failure Battery not connected	Replace battery check battery switch or connection.
	Red Fast Flashing×4	Battery	Indicates that a self-test / self-diagnostic test did not meet full duration	1. Charge the unit for the rated recharge time and perform a manual self- diagnostic test. 2.If error is still present replace battery.

BLD-TM23X
EMERGENCY LED DRIVER

MANUAL TEST

- **Initial Testing** – Quick discharge test: Press the Test button 1 time to simulate emergency mode; LED load will light up for 5 seconds
- **Monthly** – 30-second test: Press the Test button 3 seconds continuously can conduct a monthly test; LED load will light up for 30 seconds.
- **Annually** – 90-minute test: Press the Test button 6 seconds continuously can conduct a annual test; LED load will light up for 90 minutes.
- In manual test emergency mode, press the test switch twice continuously to cut off the emergency output and enter transportation.
- **Note:** during any manual test, press and hold the Test Button/Test Switch for 1 second to terminate a manual test.

WIRING DIAGRAM

⚠ CAUTION: Before installing, make certain the AC power is off.

⚠ ATTENTION:
1.NOTE: PLEASE PRESS TEST BUTTON TWICE TO MAKE CENTAIN THE BATTERY IS TURNED OFF, BEFORE INSTALLATION, MAINTENANCE ,STORAGE OR SHIPPING.
2.DO NOT MATE UNIT CONNECTOR UNTIL INSTALLATION IS COMPLETE.
3.FULL EMERGENCY POWER, THE LAMP POWER MUST BE LESS THAN THE EMERGENCY POWER.

1 For Type B Double-ended LED Tube ≤ 23W

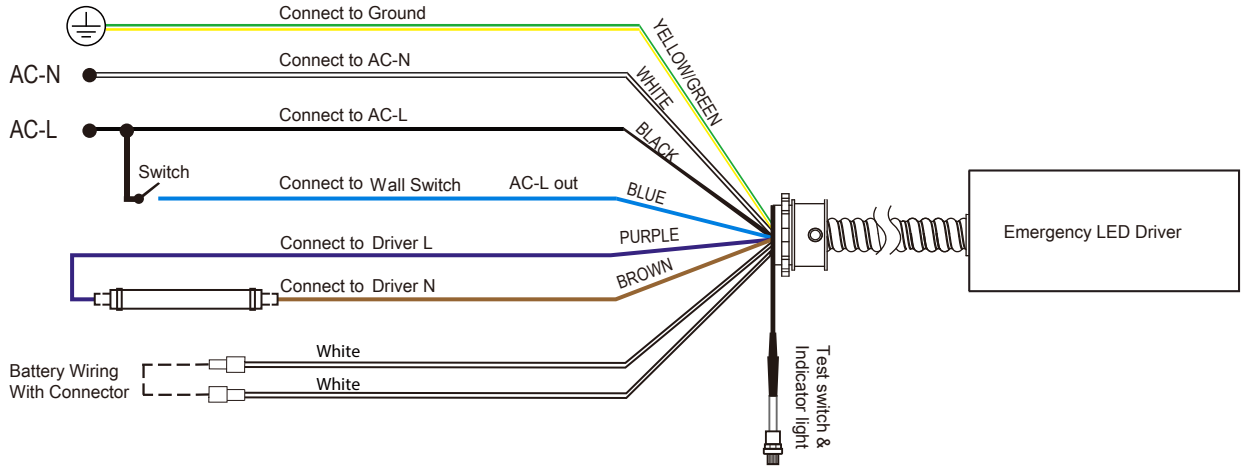

2 For Type B Single-ended LED Tube ≤ 23W

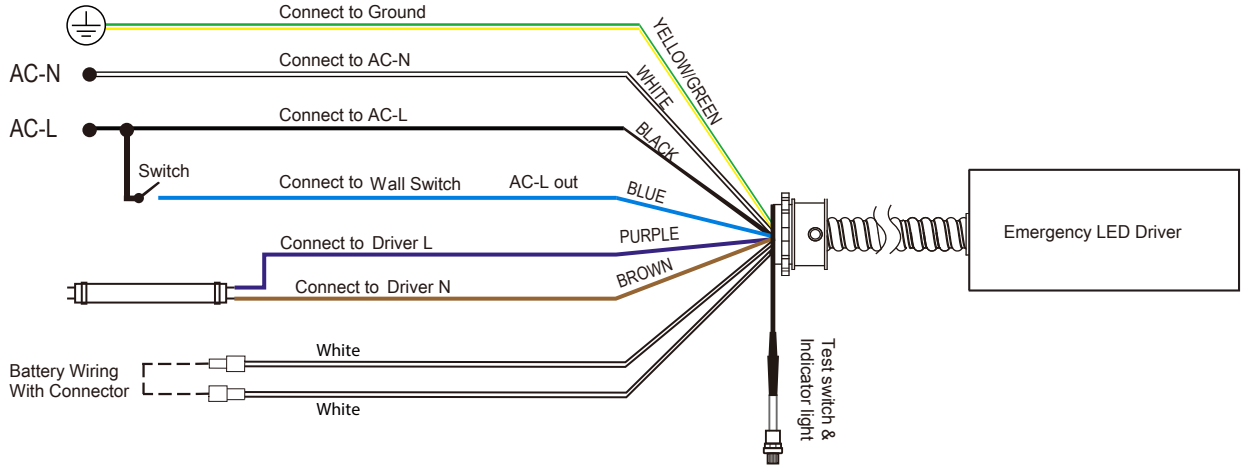

BLD-TM23X
EMERGENCY LED DRIVER

❸ For Type A LED Tube ≤ 23W

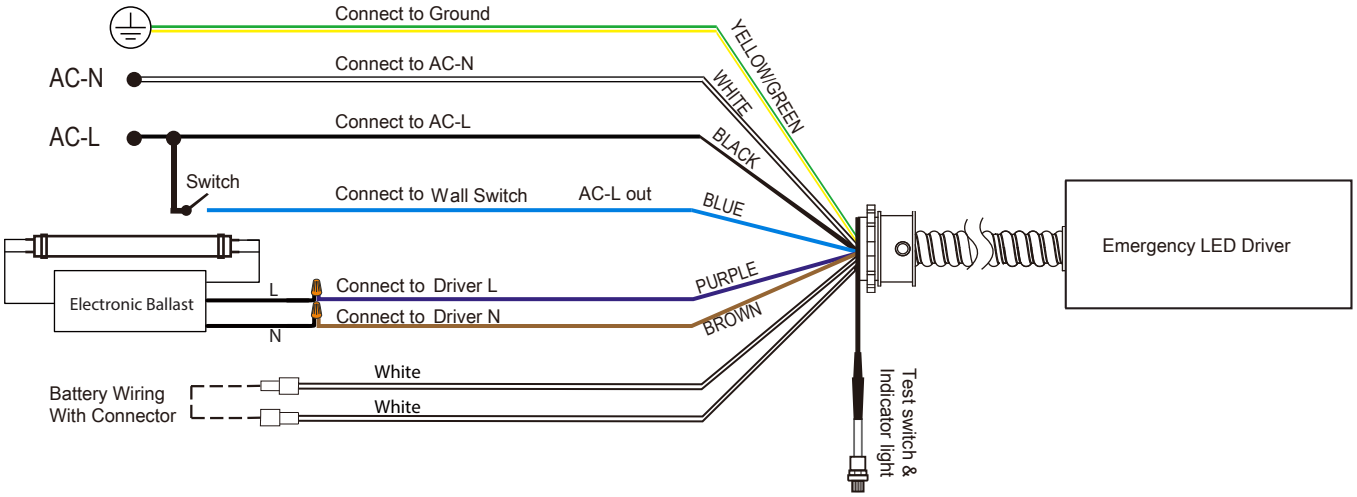

❹ For LED lights≤23W, without using Triac Dimmer

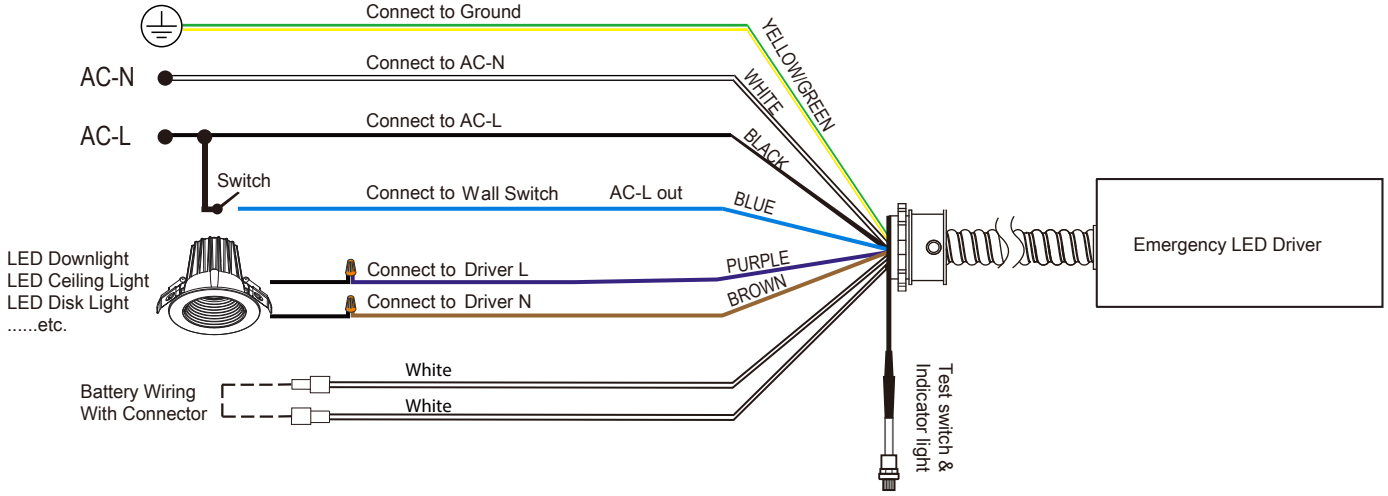

❺ For LED lights≤23W, with Triac Dimmer

