INSTALLATION INSTRUCTIONS

CAUTION: For safety and proper operation, read and follow instructions carefully before installation.

INSTALLATION INSTRUCTIONS for RUNNING MAN LED LIGHT PIPE COMBO with SELF DIAGNOSTICS

IMPORTANT SAFEGUARDS

SAVE THESE INSTRUCTIONS AND DELIVER TO OWNER AFTER INSTALLATION

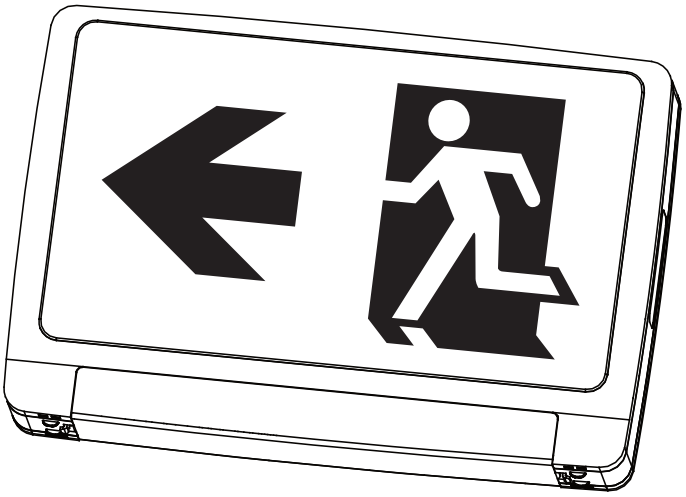

WARNING: RISK OF ELECTRIC SHOCK- NEVER CONNECT TO, DISCONNECT FROM, OR SERVICE WHILE EQUIPMENT IS ENERGIZED.

WARNING: FAILURE TO FOLLOW THESE INSTRUCTIONS AND WARNINGS MAY RESULT IN DEATH, SERIOUS INJURY OR SIGNIFICANT PROPERTY DAMAGE - For your protection, read and follow these warnings and instructions carefully before installing or maintaining this equipment. These instructions do not attempt to cover all installation and maintenance situations.

CAUTION: The battery in this unit may not be fully charged. After electricity is connected to unit, let battery charge for at least 24 hours, then normal operation of this unit should take effect. To check, press the TEST button. The LED sign/Light Pipe should illuminate.

When re-lamping, use only parts specified in the fixture. Using other lamp types may result in transformer damage or unsafe conditions.

READ AND FOLLOW ALL SAFETY INSTRUCTIONS

- Do not use outdoors.
- Equipment should be mounted securly in locations and at heights where it will not readily be subjected to tampering by unauthorized personnel.
- Do not mount near gas or electric heaters.
- Before wiring to power supply, turn off electricity at fuse or circuit breaker.
- Cap unused wires with enclosed wire nuts or other approved method.
- Do not use this equipment for other than intended use.
- The use of accessory equipment not recommended by the manufacturer will void product listing and warranty and may cause an unsafe condition.
- Use caution when servicing batteries. Battery acid can cause burns to skin and eyes. If acid is spilled on skin or in eyes, flush acid with fresh water and contact a physician immediately.
- All service on this equipment should be performed by qualified service personnel only.
- Make sure wire terminations are secure and leads are properly tucked in appropriate wire channels.

WALL MOUNT INSTALLATION

1. Start with pulling out the clear lens on the bottom of the unit. The lens snaps out quite easily. Refer to picture A.
2. Simply pop the face plate off. Pushing in the snap-in clips on the housing and pulling away the plate should help accomplish this. Refer to picture B.
3. Remove and set aside the mounting hardware kit. Remove the center KO and also the requested KOs that will match the junction box.
4. Route the wires through the center knock-out. Make electrical connections inside the junction box as described in the electrical connection section of this instruction sheet. Push wires back against the back of the sign to minimize any of the wires interfering with the illumination of the letters.
5. Now mount the sign to the J-Box.
6. Attach battery jumper wire to PBC board and replace face place back on unit, and snap the clear lens back on to complete installation.

SAVE THESE INSTRUCTIONS!

INSTALLATION INSTRUCTIONS

CEILING MOUNT INSTALLATION

1. Start with pulling out the clear lens on the bottom of the unit. The lens snaps out quite easily. Refer to picture A.
2. Simply pop the face plate off. Pushing in the snap-in clips on the housing and pulling away the plate should help accomplish this. Refer to picture B.
3. Remove and set aside the mounting hardware kit. Pull out the mounting hole cover from the top or side of the sign. Feed the AC supply wires through the mounting hole and out of the housing.
4. Secure (snap in) the canopy to the housing , through the mounting cover hole. The AC supply wires need to be redirected through the hole on the canopy. Refer to picture C.
5. Determine the position the sign needs to be mounted (the way the face needs to be pointed). Use the included J-Box mounting plate and screws to accomplish this. Refer to Picture D.
6. Make connection with AC supply wires in the J-Box as described in the electrical connection section of this instruction sheet.
7. Now mount the sign to the J-Box plate with the screws provided and tighten securely.
8. Attach battery jumper wire to PCB board and replace face plate back on unit, and snap the clear lens back on to complete installation.

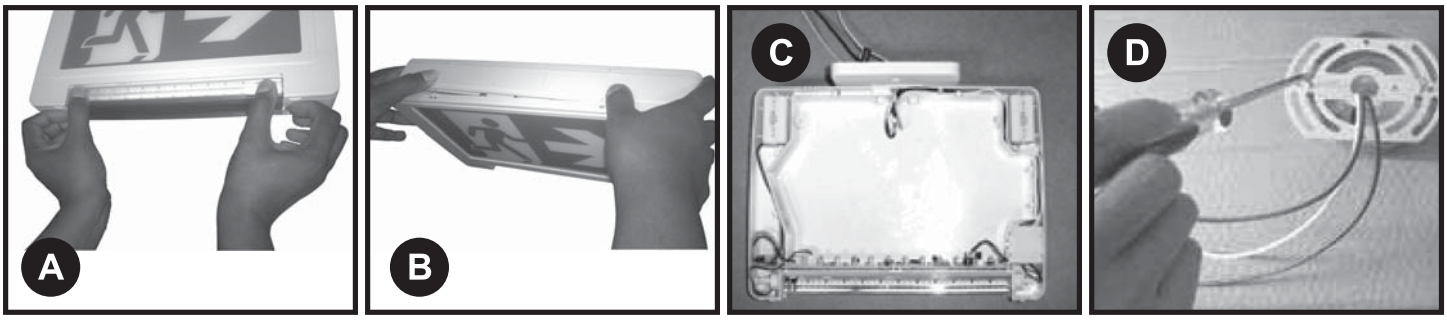

Note:

The LED Light Pipe on the bottom of the unit can be rotated to set the direction of the light output. To do this, use a flat screwdriver and turn the knob (next to the test switch) on the side of the unit.

Connection of Remote Lamp Heads (when applicable)

Locate the remote lamp leads on the board inside the fixture. Remove jumper (JMP1) from the PCB. Connect the remote lamp heads by matching the leads on the head to the leads on board. Route wires outside of fixture separately or with AC supply wires. Make sure to keep all wires out of the way of the face of the sign so there are no shadows.

WIRING DIAGRAM

Make sure power is off before making any electrical connections!

1. Make sure all wires are carefully tucked away from the cavity behind the plastic inset.
2. Plug the mating connector of the battery to the PCB board.
3. Unused wires must be capped using enclosed wire nuts.

REMOTE CAPABLE SDT

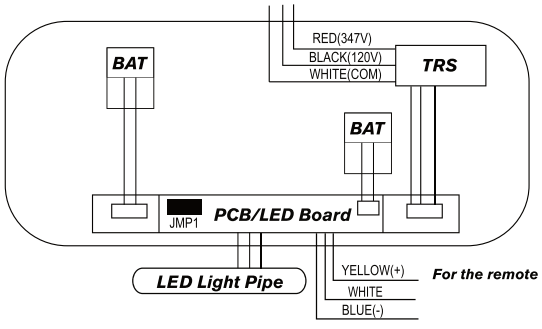

REGULAR SDT

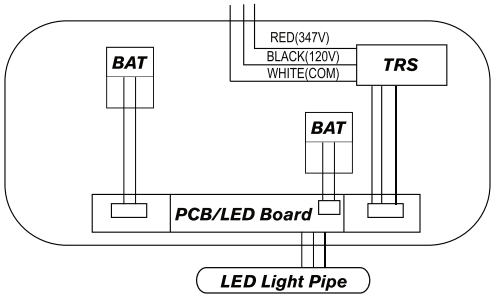

ELECTRICAL CONNECTION

- WHITE: Return for 120 VAC or 347 VAC wiring
- BLACK: Hot lead for 120 VAC wiring
- RED/ORANGE: Hot lead for 347 VAC wiring

SELF-DIAGNOSTIC TESTING

1) **Introduction**

Once the unit is properly installed according to the Installation instruction sheet and AC power is supplied, the EXIT will come ON.The dual color LED indicator will also come ON, automatically initiating the self diagnostic test function. The LED indicator points out the current unit status. A STEADY GREEN on the LED indicator indicates a normal service; BLINKING GREEN indicates that the unit is in testing mode; GREEN/RED FLASHING indicates that the battery is charging; RED (STEADY and BLINKING) would indicate a fault or a service alert. Refer to SERVICE INDICATION for more details. The LED indicator would be OFF when the unit is in Emergency mode.

2) **Self–Diagnostic Service**

The self diagnostic function is factory preset without any field adjustment. The automatic self diagnostic feature serves the following tests–

a. On-line real time monitoring of battery, lamps and LED(s): Identifies battery charging, disconnection and failure along with LED failures.

b. Self testing and a 30 second discharge once every 30 days (conforming to NFPA code requirements), after AC power has been supplied for a minimum of 24 hours.

c. Self testing and a 30 minute discharge once every 180 days, after AC power has been supplied for a minimum of 24 hours.

d. Self testing and a 90 minute discharge once every 365 days, after AC power has been supplied for a minimum of 24 hours.

3) **Service Indication**

Function	LED Indication
One flash red	Replace electronics
Two flash red	Replace battery
Three flash red	Replace red or green LED board
Four flash red	Replace lamp head board
Five flash red	Replace remote lamp head or remote lamp head disconnected
Steady red	Battery disconnected
Solid green	Trickle charge
Flashing green	In test
Red/Green flashing	Hi charge

4) **Manual Testing**

This unit also provides for manual testing by pushing the test switch in a specific pattern. The different patterns and the resulting tests are listed in the table below.

Action	Reaction & LED Indication
Push test button once (within 2 seconds)	30-second test; FLASHING Green
Push test button'2' times (within 2 seconds)	30-minute test; Green BLINKING '2' times
Push test button'3' times (within 2 seconds)	90-minute test; Green BLINKING '3' times
Push & Hold test button (3 seconds in test mode)	Cancels test. If self-test is cancelled it is recommended that a manual test of the same duration be performed at a more convenient time to ensure compliance
Push & Hold test button (more than 6 seconds in test mode)	System Reset

5) **WARNING**

A) Make sure that power is OFF before making any electrical connections.

B) Unused wires must be capped using enclosed wire nuts.

SAVE THESE INSTRUCTIONS!