BillDa®
EMERGENCY POWER LEADER

EMERGENCY LED DRIVER
Installation Instruction

This guide contains important information regardinand operation, please keep this guide for future reference.

CAUTION:

① The Emergency LED driver must connect to 0-10V dimming wires(DIM+,DIM-) of the fixture if the LED luminaire power exceeds the emergency LED driver power.When dimming to minimum,the LED luminaire power must be less than emergency driver's power.

② Do not connect the battery cable during storage and transportation. Do not mate battery connector until installation is complete and AC power is supplied.

Model: BLD-GM30X-YYY BLD-GM40X-YYY BLD-GM60X-YYY

Input Voltage: 100-347Vac, 50/60Hz

Input Current: 200mA max

Input Power: 15W max

Output Voltage: 170Vdc

Output Power: 30W/40W/60W

Emergency Time: 90 minutes

Battery Charging Current: ≤500mA

Recharge Time: 24 Hours

Output Current: ≤460mA

Ambient Temperature: 5°C ~ 50°C (41°F ~ 122°F)

Product includes the following components:

PARTS	QUANTITY
Emergency LED Driver	1
Charging Indicator/Testing Button	1
Instruction Sheet	1

Dimension:

30W/40W : L*W*H=288x77.3x46.5mm(11.34"x3.04"x1.83"), mounting center 271.5mm(10.69")

60W : L*W*H=357x77.3x46.5mm(14.06"x3.04"x1.83"), mounting center 340mm(13.39")

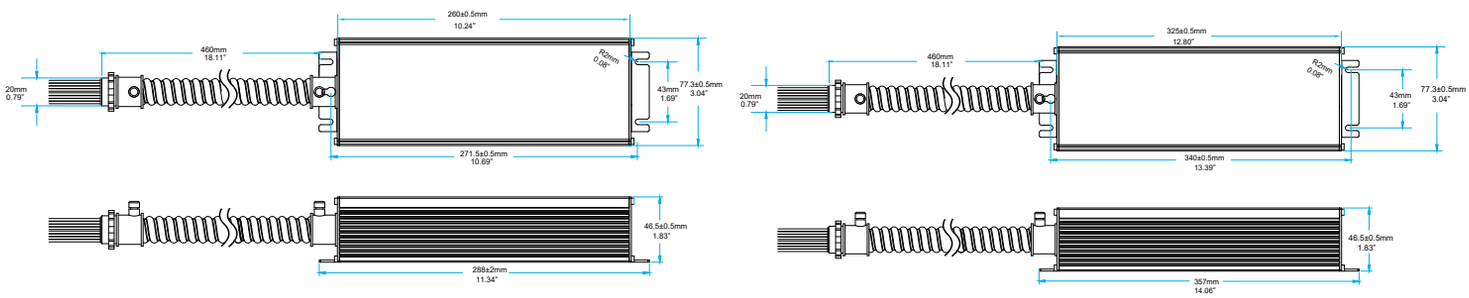

Wiring Diagram:

Wiring 1 : For LED Driver With Input Power Higher Than Emergency Output Power

0-10V Dimmable LED Driver + Dimmer Switch

Emergency Driver Dim+(Purple) , Driver Dim-(Pink) Have to connect with LED driver DIM+ and DIM-

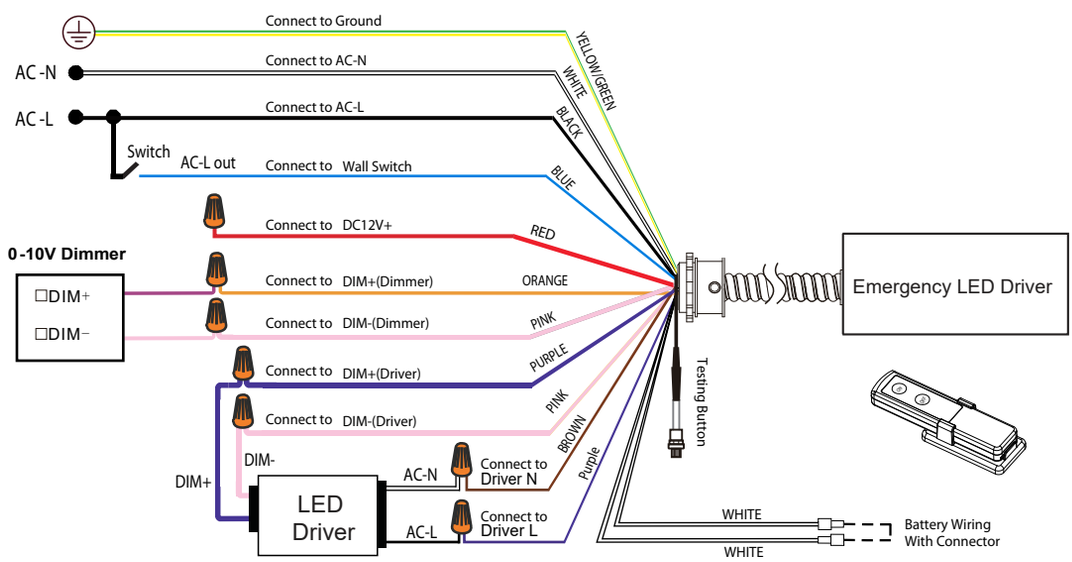

Wiring 2 : For LED Driver With Input Power Higher Than Emergency Output Power
0-10V Dimmable LED Driver + Wall Switch

If the 0-10V sensor is used, the 12V wirings of sensor must be connected to the 12V wirings of emergency dirver.If not, please cap off.

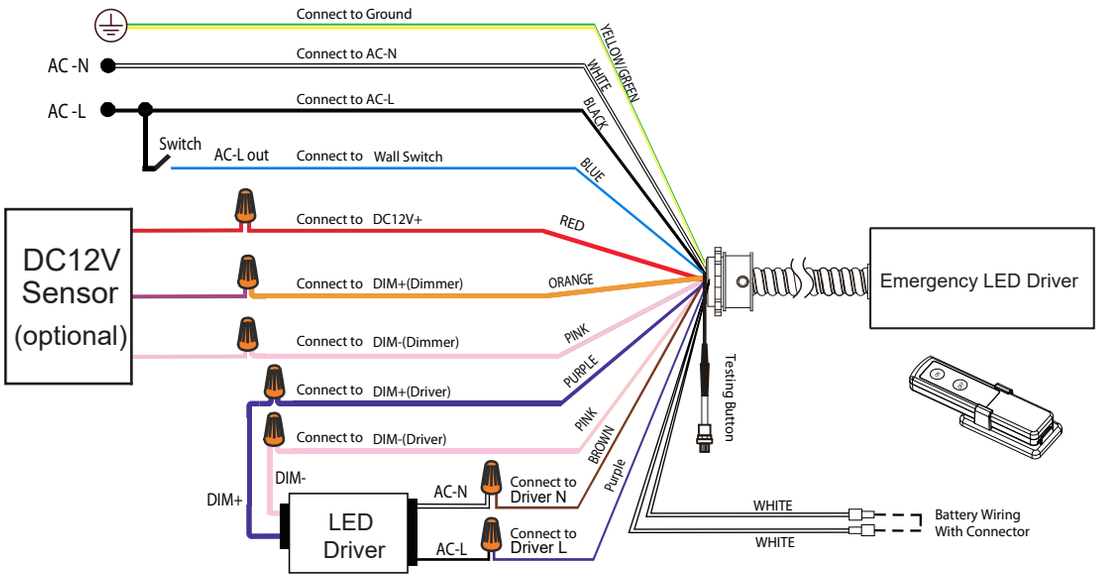

Wiring 3 : For LED Driver With Input Power Less Than Emergency Output Power
NON Dimmable LED Driver

If the 0-10V sensor is used, the 12V wirings of sensor must be connected to the 12V wirings of emergency dirver.If not, please cap off.

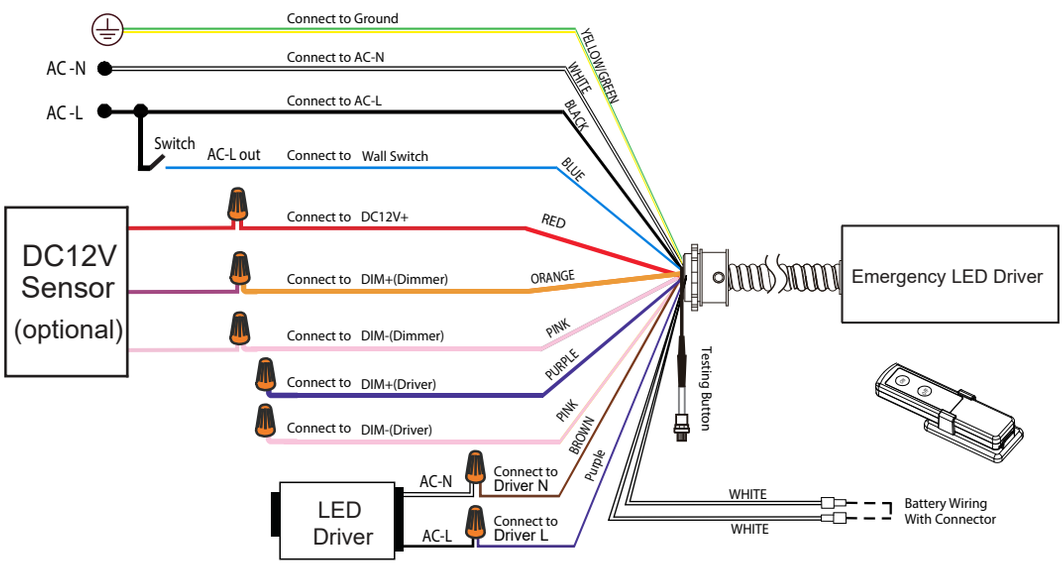

IMPORTANT SAFEGUARDS

When using electrical equipment, basic safety precautions should always be followed including the following

PLEASE READ AND FOLLOW ALL SAFETY INSTRUCTIONS.

CAUTION: RISK OF SHOCK-disconnect emergency and normal input power sources before servicing any equipment connected to this unit.

CAUTION: Risk of fire or electric shock-This emergency battery pack installation requires knowledge of luminaire and electrical systems.

CAUTION: Servicing of this equipment should be performed by qualified personnel only.

CAUTION: Before installation, make certain the AC power to fixture is off.

CAUTION: Verify that all replacement lamp types marked on the installed luminaire are also identified as suitable for use with this emergency battery pack.

CAUTION: Suitable for use in 5°C -50°C ambient temperatures. Max. mounting height:42.02 ft.

IMPORTANT: An unswitched AC power source is required (100-347 VAC, 50/60 Hz). This device is designed for fixtures listed for dry and damp locations.

IMPORTANT: Customers are advised to charge emergency LED driver 24 hours every 6 months during storage.

IMPORTANT: Lighting fixture manufacturers, electricians, and end-users need to ensure product system compatibility test before using and final installation.

CAUTION: Do not use outdoors. Do not mount near gas or electric heaters.

CAUTION: Equipment should be mounted in locations and at heights where it will not be subjected to tampering by unauthorized personnel.

CAUTION: The use of accessory equipment not recommended by the manufacturer may cause an unsafe condition The emergency battery pack is not for in an air-handling fixture.

CAUTION: Do not use this equipment for other than its intended use.