

MALL06

LED Architectural Linear Light

Specification

Construction

- Strong, durable formula for long-lasting color.
- Extruded recycled aluminum housing.
- The diffuser and endcaps at the ends of the fixture overlap to eliminate gaps and LED visibility.
- Housing is completely sealed against moisture and environmental contaminants and IP65 rated.
- Pendant, surface or wall mount in 2', 4', 8' lengths.

Optics

- Wide 110° distributions.
- 3 Field-Selectable CCTs : 3000K, 3500K, 4000K.
- ≤5 SDCM color consistency, 80 CRI, or 90 CRI options.
- High-transmission polycarbonate lens for smooth light distribution and uniformity.

Electrical

- Universal 120-277 VAC input voltage.
- 0-10V dimming driver with 0-100% dimming range.
- Selectable Wattage Levels: 100%, 80%, 60%.
- PF > 0.9, THD < 20%.
- Operating Temperature Range: -20°C to 45°C (-4˚F - + 113˚F).

Installation

- Surface Mount.
- Stem Pendant Mount.
- Wall Mount.

Certifications

- UL cUL wet location listed.

Warranty

- 5-year limited warranty.

Lifespan

- Estimated L70 ≥100,000-hour LED lifespan based on IES TM-21 calculations at 25°C.

Application

- Swimming pools, hotel entrances, train platforms, bus stops, eaves, and other semi-outdoor spots.

Note

- Actual performance may differ as a result of end-user environment and application. All values are design or typical values, measured under laboratory conditions at 25°C (±5°C). Specifications are subject to change without notice.

The advanced waterproof connector effectively maintains the airtightness of the fixture power supply.

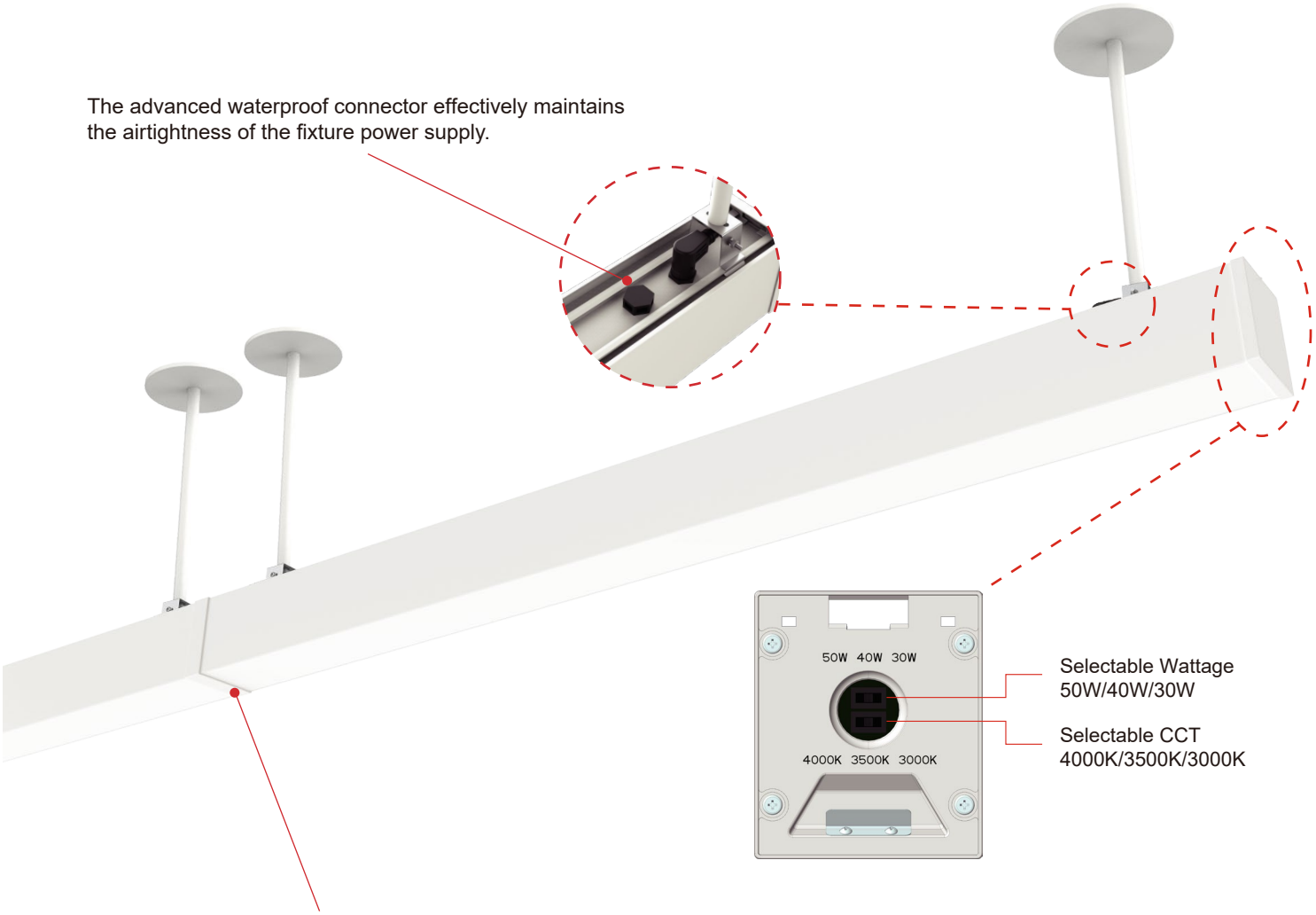

The uniquely designed connection structure has excellent sealing performance and can completely seal against moisture and environmental contaminants.

White

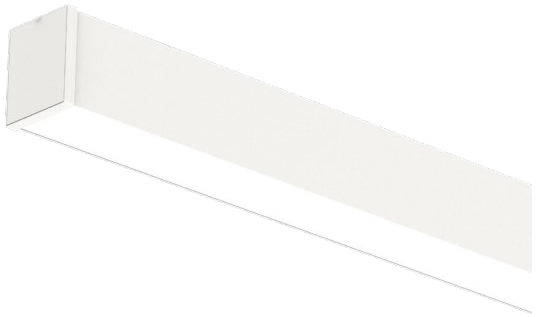

Black

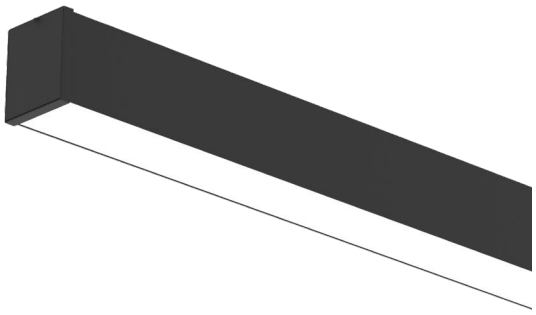

PERFORMANCE DATA

	3000K(80CRI)	3500K(80CRI)	4000K(80CRI)
Delivered Lumens Per Foot	1375 lm/ft	1375 lm/ft	1438 lm/ft
Input Watts Per Foot	12.5 W/ft	12.5 W/ft	12.5 W/ft
Lumens Per Watt	110 lm/W	110 lm/W	115 lm/W

ELECTRICAL DATA

Number of Drivers	Size	Driver Current(mA)	Nominal Power(W)	Input Voltage(V)	Current(Amps)
1	2FT	525	25	120	0.21
			25	208	0.12
			25	240	0.10
			25	277	0.09
1	4FT	1050	50	120	0.42
			50	208	0.24
			50	240	0.21
			50	277	0.18
1	8FT	2100	100	120	0.83
			100	208	0.48
			100	240	0.42
			100	277	0.36

WAY TO INSTALL

Surface Mount

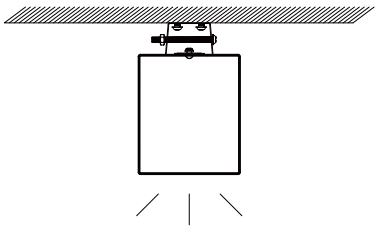

Stem Pendant Mount

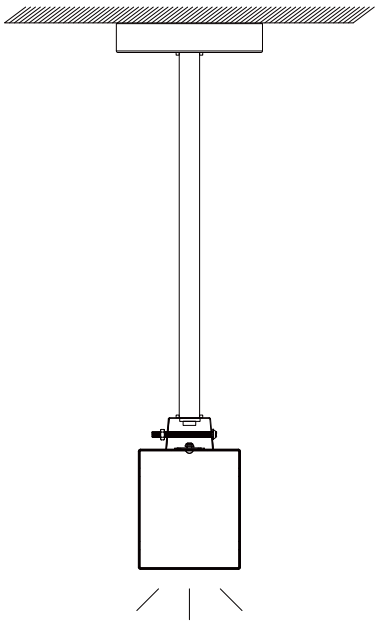

Wall Mount

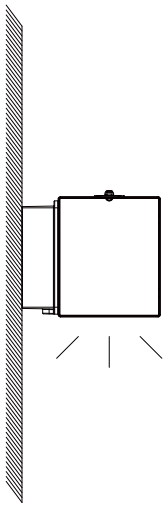

PRODUCT DIMENSION

L	W	H
2ft / 4ft / 8ft	3.15 inch(80mm)	3.70 inch(94mm)

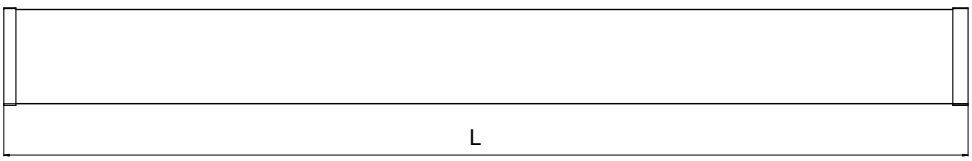

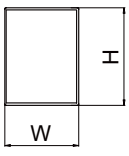

MOUNTING ACCESSORIES

1 SURFACE MOUNT KIT

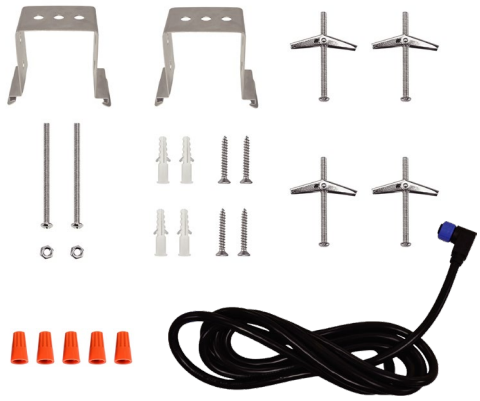

- MALL06-SM-Kit
  ALL06_Surface Mount Kit

2 WALL MOUNT KIT

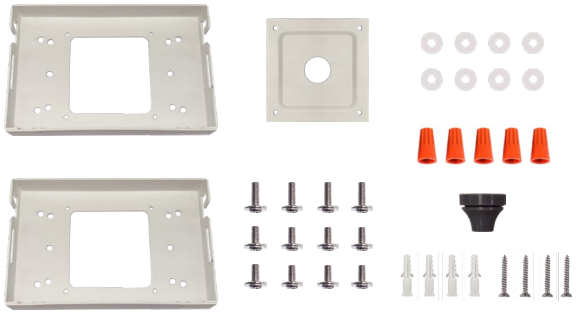

- MALL06-WM-Kit-W
  ALL06_Wall Mount Kit_White
- MALL06-WM-Kit-B
  ALL06_Wall Mount Kit_Black

3 STEM PENDANT MOUNT KIT

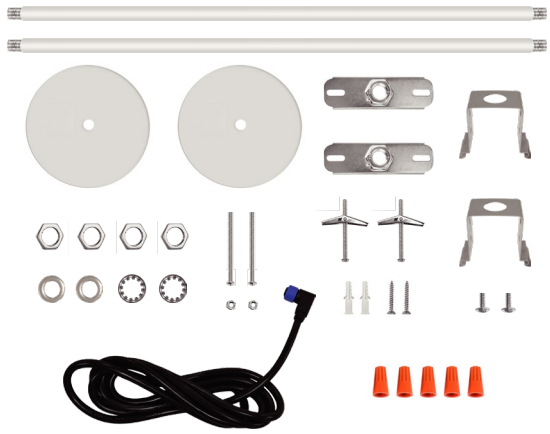

- MALL06-2SP-Kit-W
  ALL06_Stem Pendant Mount Kit_2Ft_White
- MALL06-2SP-Kit-B
  ALL06_Stem Pendant Mount Kit_2Ft_Black

4 STRAIGHT CONNECTOR KIT

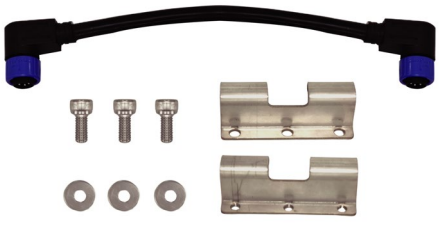

- MALL06-SC-Kit
  ALL06_Straight Connector Kit

ORDERING GUIDE

Example: MALL06 4F 50W 27V DDK Y Y Y Y Y Y

Fixture Type	Size	Power	Voltage	CCT	Finish	Optics (Direct)	CRI	Driver (Option)	Mounting (Option)	Internal Code
MALL06 Architectural Linear Light Series	**2F** 2FT **4F** 4FT **8F** 8FT	**25W** 25Watts **50W** 50Watts **100W** 100Watts	**27V** 120-277V	**DDK** Selectable Color Temperature **27K** 2700K **30K** 3000K **35K** 3500K **40K** 4000K **50K** 5000K	**B** Black **W** White	**D** Diffuser	**H** 80 **Y** 90	**D** 0-10V Dimming	**SM** Surface Mount **2SP** 2ft Stem Pendant Mount **WM** Wall Mount **Blank**	**Blank** **Alphanumeric**