INSTALLATION INSTRUCTIONS

INSTALLATION INSTRUCTIONS FOR LOW-LEVEL THIN EXIT/EMERGENCY COMBO UNIT

IMPORTANT SAFEGUARDS

READ AND FOLLOW ALL SAFETY INSTRUCTIONS

SAVE THESE INSTRUCTIONS AND DELIVER TO OWNER AFTER INSTALLATION

WARNING: RISK OF ELECTRIC SHOCK- NEVER CONNECT TO, DISCONNECT FROM, OR SERVICE WHILE EQUIPMENT IS ENERGIZED.

WARNING: FAILURE TO FOLLOW THESE INSTRUCTIONS AND WARNINGS MAY RESULT IN DEATH, SERIOUS INJURY OR SIGNIFICANT PROPERTY DAMAGE - For your protection, read and follow these warnings and instructions carefully before installing or maintaining this equipment. These instructions do not attempt to cover all installation and maintenance situations.

- All service shall be performed by qualified service electrician. This product must be installed and maintained in accordance with the applicable installation codes by a person familiar with the construction & operation of the product and the hazards involved.
- This product must be installed in accordance with the applicable installation codes and ordinances.
- Before wiring to power supply, turn off electricity at fuse or circuit breaker.
- Disconnect A. C. power and unplug battery before servicing.
- Consult your local building code for approved wiring and installation.
- May be used outdoors under cover (0°C-50°C)
- Do not let power supply cord touch hot surfaces.
- Do not mount near gas or electric heater.

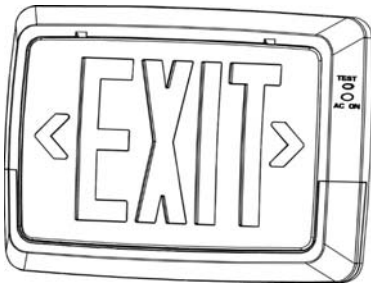

- Equipment should be mounted in locations and at heights where it will not readily be subjected to tampering by unauthorized personnel.
- The use of accessory equipment not recommended by the manufacturer may cause an unsafe condition.
- Do not use this equipment for other than intended use.
- Connect to an AC voltage as recommended on the product label of this equipment.

Removing directional Indicators (chevrons):

a. Gently pop out the color diffuser lens from the unit's faceplate.
b. Using your fingers or a soft tool, tap/knock out the desired chevron from it's position.
c. Replace the color diffuser lens onto the faceplate.

Operation:

The battery in this unit may not be fully charged. After electricity is connected to the unit for at least 24 hours, then normal operation of this unit should take effect. To check, press the "TEST" button. The EXIT sign should stay illuminated and the LED light strip on the bottom of the unit should turn ON.

In accordance with NFPA 101, your emergency lighting system must be tested monthly for a minimum of 30 seconds and annually for 90 minutes. Refer to your local codes for any additional requirements that may apply.

When re-lamping, use only LED lamps specified in the fixture. Using other lamp types may result in damage or unsafe conditions.

SAVE THESE INSTRUCTIONS!

INSTALLATION INSTRUCTIONS

Parts description:

a. Chevron
b. Faceplate
c. Red/Green diffuser lens
d. Housing
e. Wirenuts
f. Junction box (not provided)
g. Input wires
h. LED light strip
i. Light strip lens

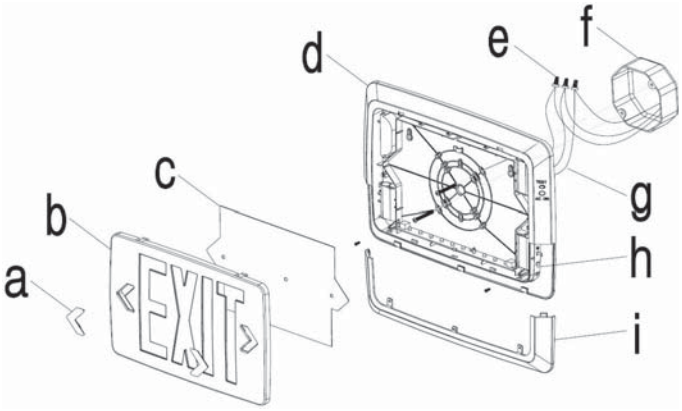

Note: UL recommended maximum mounting height to achieve 1-fc illumination on the floor is 6-ft.

WALL MOUNT INSTALLATION

1. Turn off AC power and remove the faceplate of the EXIT section.
2. Refer to the "Removing Directional Indicators" section to remove the appropriate chevron(s) from the faceplate when required.
3. Remove the appropriate knockouts in the backplate of the unit to fit junction box mounting points. **Note:** These knockouts are not intended for use with Conduit fittings.
4. Feed the power supply module input wires from the sign through the 7/8" opening in the center of the backplate. Route the wires along the side walls of the sign enclosure to ensure proper sign illumination and to protect wires from damage.
5. Connect building supply wires to the power supply module input wires and feed splices into the junction box. Refer to the "Wiring Diagrams" section for wiring instructions. Cap off the unused input lead.
6. Attach the backplate to the junction box using the screws provided.
7. After AC power can be continuously supplied, push in connector from battery to the LED board.
8. Reattach the faceplate to the sign enclosure to finish installation.

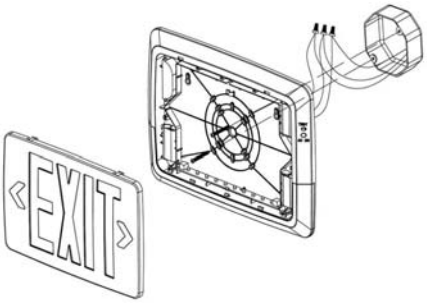

Wiring Diagram:

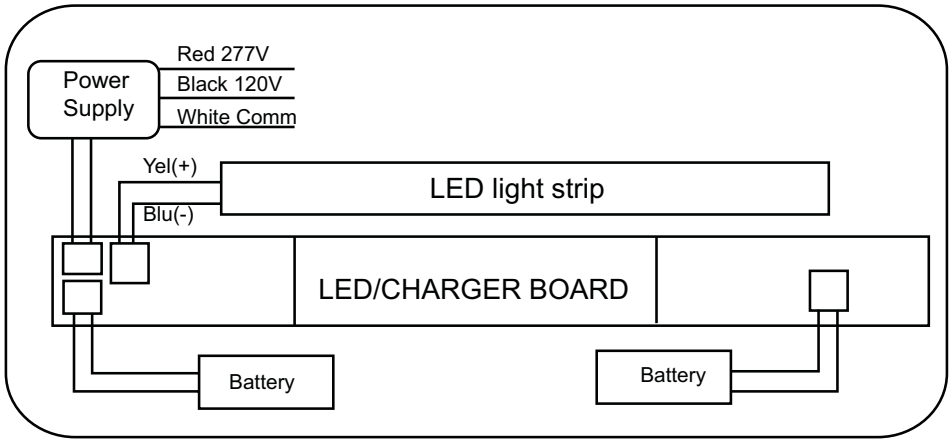

Note: Cap off the UNUSED input lead. Failure to do so can cause an unsafe operating condition.

SAVE THESE INSTRUCTIONS!