BillDa®
EMERGENCY POWER LEADER

277-480VAC High Voltage Input Emergency LED Driver

277-480Vac

FEATURES

- UL924 listed for factory and field installation
- Easy wiring: directly connect to AC INPUT OF LED luminaires
- Constant power output
- High Voltage Input : 277-480V AC
- Self testing monthly/yearly
- Meets or exceeds all NEC, IBC, and Life Safety Code Emergency Lighting Requirements
- Suitable for use in dry, damp location and wet locations.
- Built-in lithium battery
- RoHS Compliant



c UL us LISTED E493915

RoHS COMPLIANT

HIGH VOLTAGE INPUT
277-480V AC

CP CONSTANT POWER EMERGENCY OUTPUT

Self Test

APPLICATIONS

For 0-10V dimmable 277-480VAC INPUT LED fixtures, such as LED UFO highay, linear highbay...



Linear High Bay

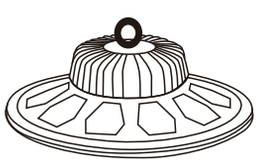

UFO High Bay

DIMENSION

30W/40W : L*W*H=319x77x46.8mm(12.60"x3.03"x1.84"), mounting center 301mm(11.85")
60W : L*W*H=370x77x46.8mm(14.57"x3.03"x1.84"), mounting center 351mm(13.82")

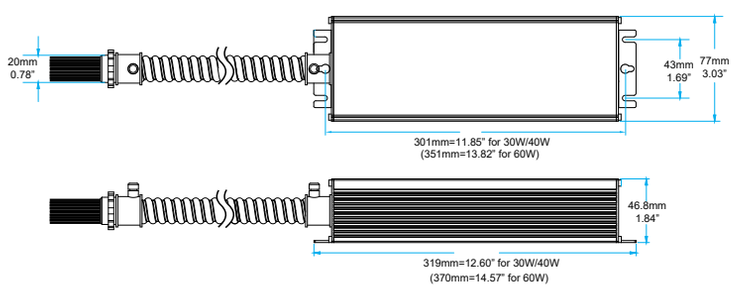

PRODUCT ADVANTAGES

Easy Wiring

Directly connect to AC Input of LED Fixtures. Saves Time and Money on the Jobsite

Constant Power Performance

Constant wattage delivery maintains illumination level for the full emergency runtime with no degradation

Self-Testing

Monthly and annual self-test features satisfies the periodic testing requirements in accordance with NFPA 101 while the on-board diagnostics provides system readiness with visual indicators.

SPEFICICATIONS

Input Voltage	277-480V AC, 50/60Hz	Output Voltage	400V DC
Input Current	100mA max.	Output Current	≤150mA
Input Power	20W max.	Output Power	30W/40W/60W
Emergency Time	90 minutes	Battery Type	Li-ion battery
Charging Time	≥24 hours	Ambient Temp	5℃-50℃

Web: www.billda.net Email: gm@billda.net Tel:(+86) 755-29360026 Fax:(+86) 755-29360036



WIRING DIAGRAM

IMPORTANT
Emergency Driver Dim+ (Blue) , Driver Dim- (Yellow) has to connect with LED driver DIM+ and DIM-
Will NOT operate if not connected.

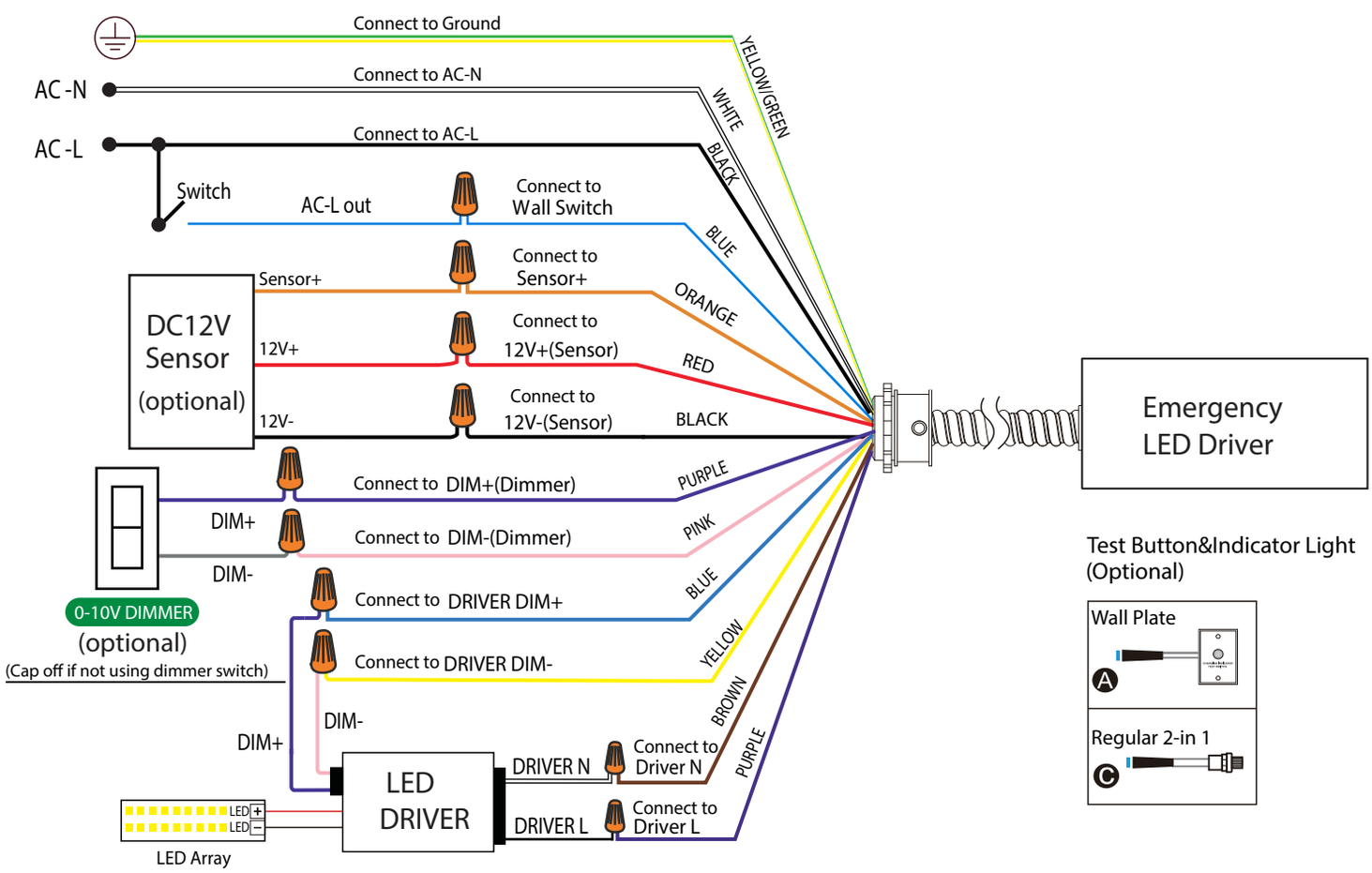

Note: For 277-480VAC 0-10V dimmable LED FIXTURES with an input power less than 300W

OPERATION

AC Operation: AC power is present.The AC driver operates the LED load as designed.The emergency driver is charging in a standby mode. The charging indicator will be lit, showing that the battery is charging.

Emergency Operation: When the AC power goes out, the emergency driver detects the AC power outage and automatically switch to emergency mode. When red LED light is OFF, that means driver is discharging. When the AC power is restored, the emergency driver goes back to AC power and starts recharging.



Indicator Light Introduction

① Green/Flashing: Charging
② Green/ON: Full-charged
③ Red/ON: Discharging(emergency mode)
④ Red/Flashing: Low battery
⑤ Yellow: Error

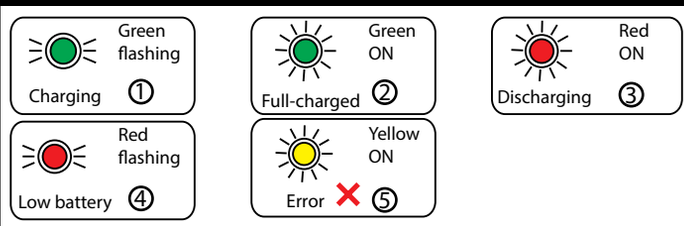

Test Switch Introduction

① Press the test swith to confirm whether emergency function is normal
② During Emergency Mode, Press test switch twice to cut off the emergency output and enter Shipping Mode

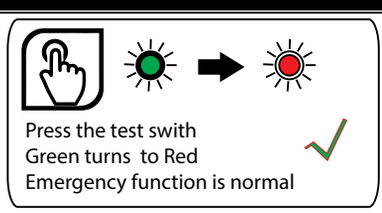

IMPORTANT SAFEGUARDS

When using electrical equipment, basic safety precautions should always be followed including the following

PLEASE READ AND FOLLOW ALL SAFETY INSTRUCTIONS.

CAUTION: RISK OF SHOCK-disconnect emergency and normal input power sources before servicing
ASSEMBLY and FIELD INSTALLATION WIRING: WARNING: AC power must be off before proceeding with assembly or installation of emergency driver.
IMPORTANT: An un-switched AC power source is required(277-480Vac). It is designed for fixtures listed for dry and damp locations
IMPORTANT: Please charge the battery consistently for >24 hours for the first time usage so as to activate the whole battery cells of discharging/charging duration.
IMPORTANT: Customers are advised to charge emergency LED drivers 24 hours every 6 months during storage,and which could be stocked for 1 year at most. If customers don't install and recharge for more than 1 year, the batteries may be damaged. This is not covered in the warranty, and we would charge for replacement.
IMPORTANT: Lighting fixture manufacturers, electricians, and end-users need to ensure product system compatibility test before u sing and final installation.
CAUTION: Make sure all electrical connections conform to the National Electrical Code and all applicable local regulations.
CAUTION: This is a sealed unit. Components are not replaceable. Replace the entire LED Emergency Backup unit when necessary.
CAUTION: Equipment should be mounted in locations and at heights where it is not be subjected to tampering by unauthorized personnel.
CAUTION: The use of accessory equipment is not recommended by the manufacturer and may cause an unsafe condition.
CAUTION: Use with grounded, UL Listed, dry or damp location rated fixtures. Case should also be grounded.
CAUTION: Battery is rechargeable Li-ion type and must be recycled or disposed of properly
CAUTION: Suitable for use in 5°C -50°C ambient temperatures
CAUTION: This product is for use in indoor fixtures only. Do NOT use near heated air handling outlets or hazardous locations.. Do not let power supply cords touch hot surfaces. Do not mount near gas or electric heaters. Do not use this equipment for other than its intended use. Failure to follow this may cause an unsafe condition and will void warranty. Servicing of this equipment should be performed by qualified personnel only.