Line Voltage Bi-Level Passive Infrared Sensor
BRI812P-D-A-D/BRI812P-D-B-D Instruction



BRI812P-D-A-D



BRI812P-D-B-D



RC-100
(OPTIONAL)

INTRODUCTION

The BRI812P-D-A-D/BRI812P-D-B-D mounts in an outdoor lighting fixture and provides multi-level control based on motion and/or daylight contribution. It controls 0-10 VDC LED drivers or dimming ballasts, and is rated for wet and cold locations.
All control parameters are adjustable via a wireless configuration tool capable of storing and transmitting sensor profiles.

SPECIFICATIONS

Power supply	120~480VAC 50/60Hz
Maximum load @ -40°F ~ +158°F (-40°C ~ +70°C)	Tungsten -800W@120V/1200W@277V Electronic Ballast - 8A@120V/5A@277V/5A@347V Standard ballast - 5A@480V
Dim control output	0-10V, max. 25mA sinking current
Detection radius/angle	Max 26.2ft.(8m)/360°
Mounting height	Max 40ft.(12m)
Time setting	10sec.-15min. (adjustable)
Light-control	10-2000Lux (adjustable)
Humidity	Max. 95% RH
Temperature	-40°F ~ +158°F (-40°C ~ +70°C)

⚠ NOTE

NOTE: Warm up time is 40seconds. After the sensor connects input power first time, the light will keep on 40seconds,then go to dimming to work normally.

NOTE: Factory Default Setting: 100% sensitivity, Hold on time: 10S, Daylight sensor is 30Lux, Dimming level:30%,Dimming time: 60minitues.

NOTE: Any setting changed by remote control, the led light that sensor connect will on/off as confirm.

FUNCTION AND OPTIONS

If offers 4 levels of the light Control : dimming light(0,10%,30%, 50%)--100%--dimming light (0,10%,30%,50%)--off periods of selectable waiting time:motion holdtime and 24hours, selectable daylight threashold,and freedom of detection ara.
If natral light lower Light-control setting (10Lux,30Lux,50Lux),the light will not automatically on (0,10%,30%,50%). When person enter in the room,the light will on 100%,after person left the room,the room enter in semi bright brightness after hold on time.

■ Line Voltage Bi-Level Passive Infrared Sensor
BRI812P-D-A-D/BRI812P-D-B-D Instruction



With suffcient natural light, the light does not switch on when presence detected.



With insufficient natural light, the sensor switches on the light automatically when person enters the (options) standby level after the room. The lamp never switch off with presence, even the nature light is sufficient.



People left, light still dims to 0/10%/20%/30% (options) standby level after the hold time.



Light switches off automatically after the dimming time elapsed.

DIMENSIONS

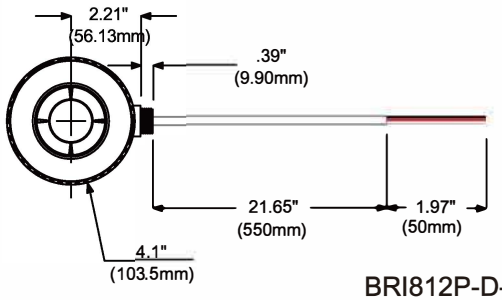

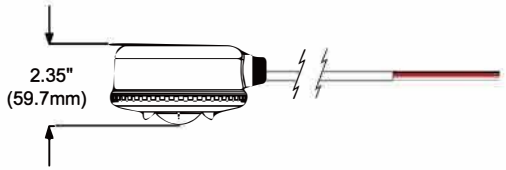

BRI812P-D-A-D-Lxdimensions

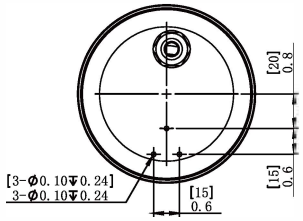

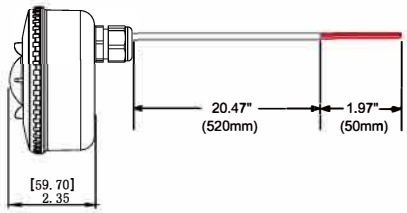

BRI812P-D-B-D-Lxdimensions

WARNING
TURN THE POWER OFF AT THE CIRCUIT BREAKER BEFORE INSTALLING THE SENSOR.

AVERTISSEMENT
COUPER L'ÉLECTRICITÉ AU DISJONCTEUR AVANT D'INSTALLER LE CAPTEUR.

BRI812P-D-A-D/BRI812P-D-B-D WIRING DIAGRAMS

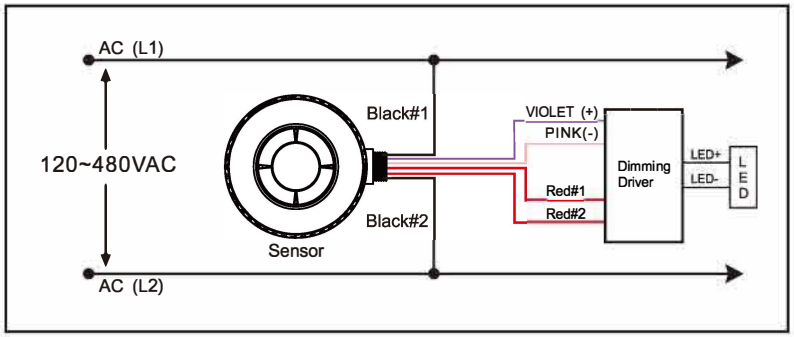

SENSOR INFORMATION

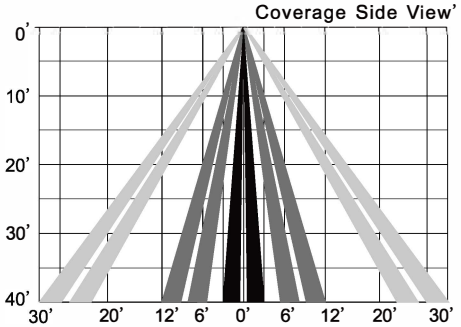

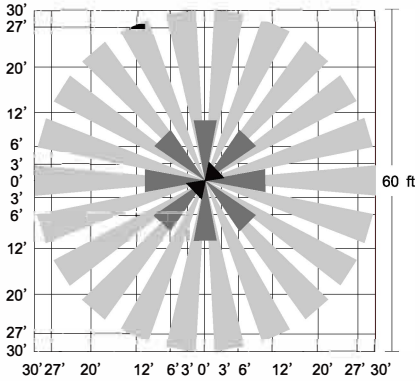

PARAMETER SETTING BY DIP SWITCH

Consider the picture: 1, 2 set sensitivity; 3, 4 set hold time; 5, 6 set the lux; 7, 8 stand-by light level ; 9, 10 set stand-by time ;

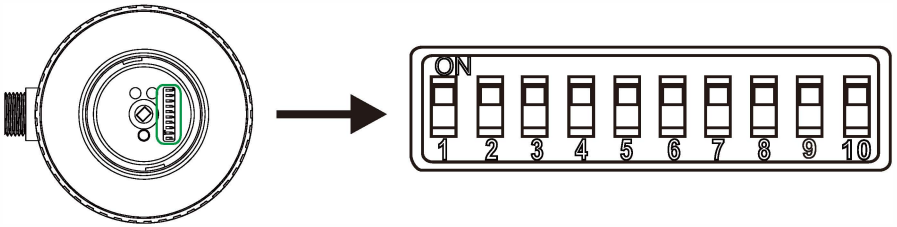

Detection Range Setting (sensitivity)

Detection range is the term used to describe the radii of the more or less circular detection zone produced on the ground after mounting the sensor light at a height of 40ft, pull switch to the ON position as " ↑ ", pull switch to the OFF position as "↓", switch location and detection range of the corresponding table is as follows:

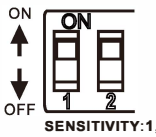

SENSITIVITY:1, 2

SENSITIVITY 1	2
↓	↓ 20%
↓	↑ 50%
↑	↓ 75%
↑	↑ 100%

Hold Time Setting

The light can be set to stay ON for any period of time between approx.10sec and a maximum of 15min. Any movement detected before this time elapse will re-start the timer. It is recommended to select the shortest time for adjusting the detection zone and for performing the walk test.
Pull switch to the ON position as "↑", pull switch to the OFF position as "↓", switch location and hold time of the corresponding table is as follows:

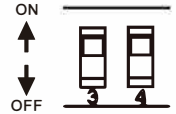

TIME:3, 4

TIME 3	4
↓	↓ 10S
↓	↑ 1Min
↑	↓ 5Min
↑	↑ 15Min

Light-control Setting

The chosen light response threshold can be infinitely from approx. 10-50lux, pull switch to the ON position as "↑", pull switch to the OFF position as "↓", switch location and light-control of the corresponding table is as follows:

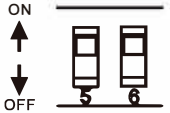

LIGHT:5, 6

LIGHT 5	6
↓	↓ ☼ (light sensor disable)
↓	↑ 10Lux
↑	↓ 30Lux
↑	↑ 50Lux

Stand-by Light Level Setting

Switch to the on is "↑", switch to the off is "↓"; The corresponding file of switch location and stand-by level as follow:

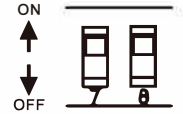

STAND-BY LEVEL:7, 8

STAND-BY LEVEL 7	8
↓	↓ 0%
↓	↑ 10%
↑	↓ 30%
↑	↑ 50%

Stand-by Time Setting

Switch to the on is "↑", switch to the off is "↓"; The corresponding file of switch location and stand-by time as follow:

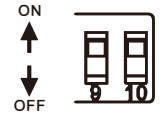

STAND-BY TIME:9, 10

STAND-BY TIME 9	10
↓	↓ +∞
↓	↑ 1Min
↑	↓ 30Min
↑	↑ 60Min

c UL us LISTED

V1.1