Selectable LED Square Slim Panel Light

ONE SOURCE LIGHT

Wattages: (4″)9W ; (6″)12W

Selectable LED Square Slim Panel Light can be widely used in indoor lighting (Wet location) ideal for bathrooms, laundry,porches and garage work rooms.



4 inch 6 inch

Intertek

FEATURES

- Edge-lit technology, with no glare or dark spots
- Triac Dimmers
- Instant on
- No flicker
- 50,000 hours at 70% lumen maintenance rated life
- CCT:2700-5000K
- 5 years manufacturer warranty

SPECIFICATION		
TYPE	WSD-4SSPL9W12-5CCT-W	WSD-6SSPL12W12-5CCT-W
WATTAGE	9W	12W
LUMEN	761.84 lm	938.00 lm
EFFICACY	> 80 lm/W	> 80 lm/W
CCT	2700K,3000K,3500K,4000K,5000K	
CRI	> 90	
INPUT VOLTAGE	AC120V	
LIGHTING ANGLE	113	
DIMMABLE	Triac Dimming	
LED TYPE	SMD2835	
CERTIFICATE	ETL	
RATING	Wet Locations	
DESCRIPTION	CCT Adjustable	
LIFE TIME	50000 hours	
FACTORY SETTINGS	4000K	
OPERATING TEMP	(-4°F~ 113°F) -20~45°C	
WARRANTY	5 year limited	

Selectable LED Square Slim Panel Light

ONE SOURCE LIGHT

Wattages: (4″)9W ; (6″)12W

DIMENSION

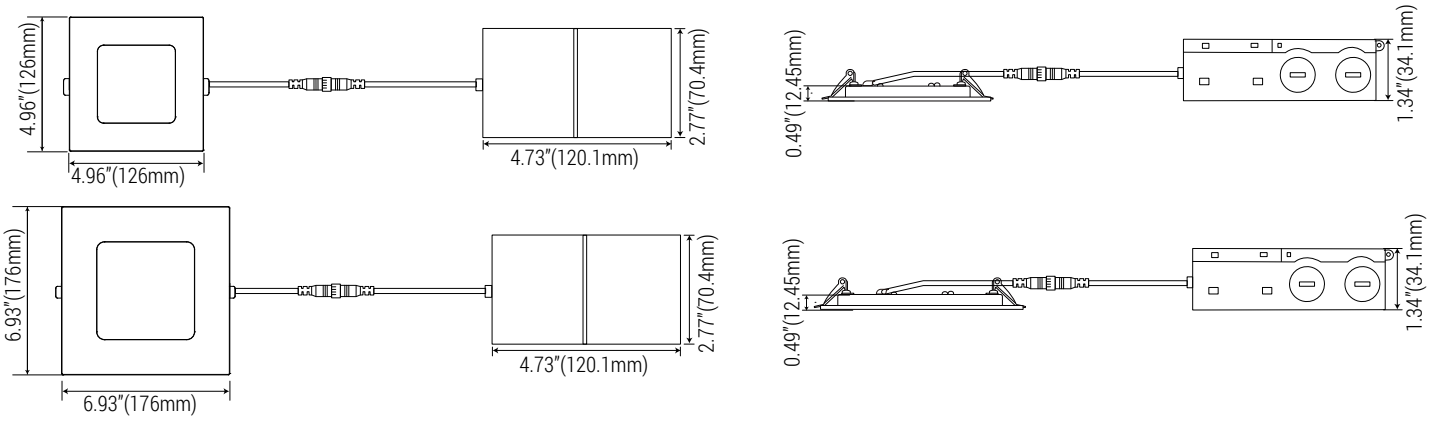

SIZE	HOLE SIZE
4inch	4 21/64″(110mm)
6inch	6 19/64″(160mm)

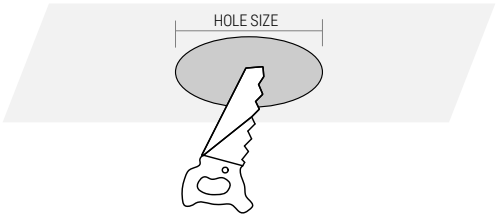

STANDARD ACCESSORIES



J-Box driver



Connector

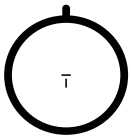

Hole cutout card

ORDERING INFORMATION

WSD-4SSPL9W12-5CCT-W / WSD-6SSPL12W12-5CCT-W

4	SSPL	9W	12	5CCT	W
SIZE	PRODUCT	POWER	VOLTAGE	CCT	FINISH
4 (4inch) **6** (6inch)	**LED** Square Slim Panel Light	**9W** (9W) **12W** (12W)	**27** AC120V	**5CCT** 2700K/3000K 3500K/4000K 5000K	W - (White)

Selectable LED Square Slim Panel Light

ONE SOURCE LIGHT

Wattages: (4″)9W ; (6″)12W

Easily flip the switch for desired CCT



Products view



PHOTOMETRICS

For complete IES files, please visit our website.

WSD-4RSPL9W12-5CCT-W (9W&4000K)

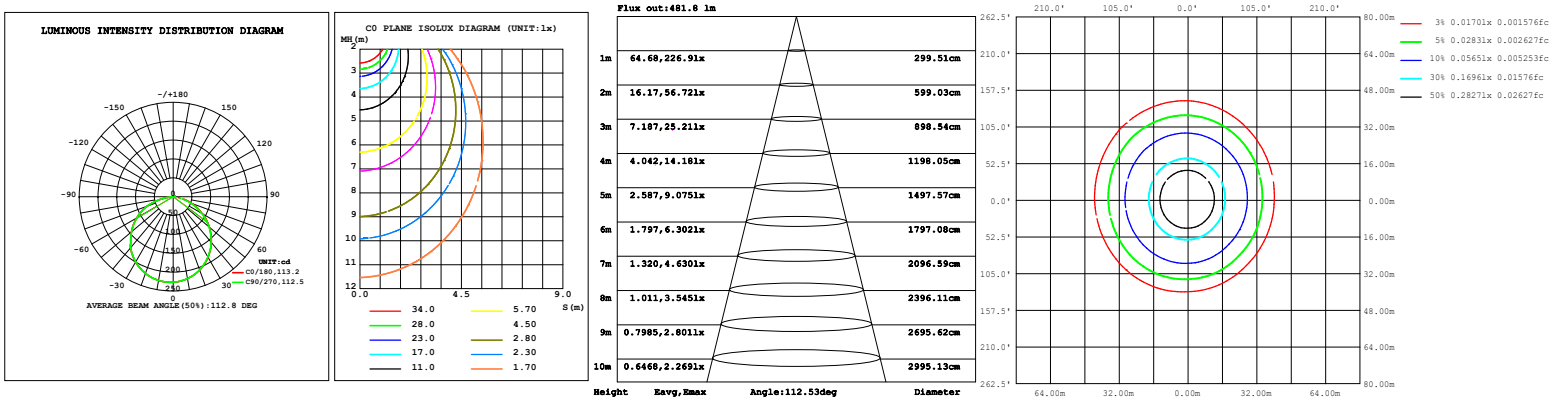

WSD-6RSPL12W12-5CCT-W (12W&4000K)

