NYXTEU New York City Approved Steel LED Exit Sign

Project:	
Type:	
Catalog #:	



STANDARD

UL LISTED · MOUNTING CANOPY · NEW YORK CITY APPROVED · ALL LED

ILLUMINATION

- *Ultra bright, energy efficient, long life Red LED.*
- *New York City compliant 8" EXIT letters.*

ELECTRICAL

- *Dual 120/277 voltage.*
- *Charge rate/power "ON" LED indicator light and push-to-test switch for mandated code compliance testing.*
- *3.6V long life, maintenance-free, rechargeable NiCd battery.*
- *Internal solid-state transfer switch automatically connects the internal battery to LED board for minimum 90-minute emergency illumination.*
- *Fully automatic solid-state, two rate charger initiates battery charging to recharge a discharged battery in 24 hours.*

MOUNTING

- *Aluminum mounting canopy included for top or end mount.*
- *Universal K/O pattern on back plate for wall mount.*
- *Top and side K/O provided for conduit feed applications.*

HOUSING

- *Durable, powder-coated 20-gauge steel construction in white or black finish.*
- *Unique design allows double face conversion in the field.*
- *Field removable steel knockout chevron directional indicators.*

WARRANTY / LISTING

- *Five year warranty on all electronics and housing. Battery prorated for five years.*
- *Meets UL924, NFPA 101 Life Safety Code, NEC, OSHA, Local and State Codes.*

DIMENSIONS

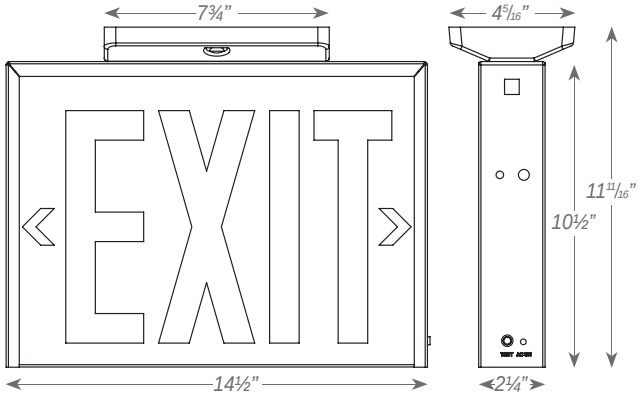

ORDERING INFORMATION

Sample Part Number: ***NYXTEU3RWEM***

MODEL	No. of FACES		LETTER COLOR		HOUSING COLOR		BATTERY	
NYXTEU	*3*	*Universal Single/ Double Face*	*R*	*Red*	*W*	*White*	*Blank*	*AC Only*
					B	*Black*	*EM*	*Battery Backup*

Project:	
Type:	
Catalog #:	

ELECTRICAL INFORMATION

CATALOG NUMBER	INPUT WATTS (W)		INPUT AMPS (A)	
	120V	277V	120V	277V
NYXTEU/EM	5.0	5.0	0.041	0.018