NYELXTEU New York City Compliant Edgelit Aluminum Exit Sign

Project:	
Type:	
Catalog #:	



STANDARD | *OPTIONAL*

ILLUMINATION

- *Ultra bright, energy efficient, long life Red LED exit sign illumination.*
- *UV-stabilized ultra-clear acrylic edgelit panel provides consistent, uniform illumination.*
- *Double face utilizes factory installed silver or white mylar background panel.*
- *New York City compliant 8" EXIT letters.*

ELECTRICAL

- *Dual 120/277 voltage standard.*
- *Charge rate/power "ON" LED indicator light and push-to-test switch for mandated code compliance testing.*
- *4.8V long life, maintenance-free, rechargeable NiCd battery (EM models only).*
- *Internal solid-state transfer switch automatically connects the internal battery to LED board for minimum 90-minute emergency illumination.*
- *Fully automatic solid-state, two rate charger initiates battery charging to recharge a discharged battery in 24 hours.*

MOUNTING

- *Aluminum mounting canopy included for top, end or back mount. Available in optional black or white powder-coated finishes.*

HOUSING

- *Premium-grade, extruded aluminum housing (also available in black or white powder-coated finishes).*
- *Self-adhesive Chevron appliques and guide template provided for directional indication.*

OPTIONS

- *SDT: Self-diagnostic feature performs monthly, biannual, and annual tests to ensure reliable operation and meets electrical and life safety codes.*

WARRANTY / LISTING

- *Five year warranty on all electronics and housing. Battery prorated for five years.*
- *Meets UL924, NFPA 101 Life Safety Code, NEC, OSHA, Local and State Codes.*
- *UL Listed for damp locations (0°C – 50°C).*
- *Certified to CEC under Title 20 Regulations.*

DIMENSIONS

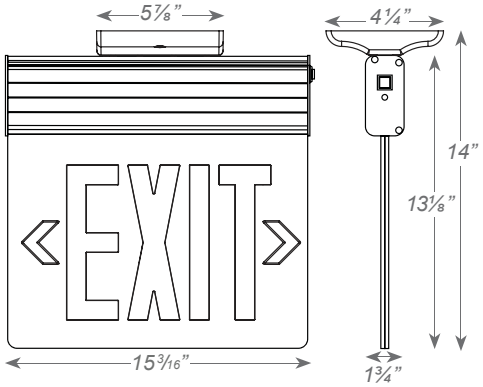

ORDERING INFORMATION

Sample Part Number: **NYELXTEU1RCAEM**

MODEL	No. of FACES		LETTER COLOR		PANEL		HOUSING COLOR		BATTERY		OPTIONS	
NYELXTEU	1	Single Face	R	Red	C	Clear[1]	W	White	(blank)	AC-Only	SDT	Self-Diagnostics[2]
	2	Double Face			M	Mirror	B	Black	EM	Battery Backup		
					W	White	A	Aluminum				

[1] *With single face only.*

[2] *Available only with EM units.*

NYELXTEU New York City Compliant Edgelit Aluminum Exit Sign

Project:	
Type:	
Catalog #:	

ELECTRICAL INFORMATION

CATALOG NUMBER	INPUT WATTS (W)					INPUT AMPS (A)				
	120V	277V	208V	220V	240V	120V	277V	208V	220V	240V
NYELXTEU/EM/SPV	3.6	4.0	3.9	3.93	3.98	0.030	0.020	0.023	0.022	0.021
NYELXTEU/SDT	3.6	4.0	-	-	-	0.030	0.020	-	-	-