LED AREA LIGHT

FEATURES AND SPECIFICATIONS

Construction

- Housing: Die-cast Aluminum
- Lens: Polycarbonate

Electrical

- High efficacy up to 170lm/W ,500W up to 160lm/w
- AC120-277V, AC277-480V,0-10V dimming
- Surge Protection: L/N-P 6KV for 150W, 10KV Surge Protection for 300W & 500W
- CCT & Wattage Selectable
- Light Distribution: (T3).
- Waterproof: IP65 rated

Applications

- Parking lots, Roadways, Outdoor applications

Installation

- 3 kinds of mounting brackets available (SF, DI, TR)
- Plug-in and Zhaga socket microwave motion sensor available (Factory)
- Photocell dusk to dawn function Optional

Warranty

- 5 years warranty

Specs at a Glance			* Nominal Wattage (Switchable)
Configuration	J-AR09-150W-L-PC-3CCT-T3 J-AR09-150W-H-PC-3CCT-T3	J-AR09-300W-L-PCX-3CCT-T3 J-AR09-300W-H-PCX-3CCT-T3	J-AR09-500W-L-PCX-3CCT-T3
Input Voltage	AC120-277V AC277-480V	AC120-277V AC277-480V	AC120-277V
Wattage (W)*	100W/120W/150W wattage adjustable	200W/240W/300W wattage adjustable	300W/350W/400W/450W/500W wattage adjustable
Lumens (lm)	max.25500lm	max.51000lm	max.80000lm
Ecacy (LPW	Up to 170lm/w		Up to 160lm/w
Light Distribution	T3		
CCT (K)	3000K/4000K/5000K Tunable		
CRI	>80		
Operating Temp	-40°C-50°C		
Certification	UL DLC Premium		
Warranty	5 year limited warranty		

Ordering Guide

Example: J-AR09-150W-L-PC-3CCT-T3

Model	Wattage xxxW	Input Voltage L or H	Lighting Distribution	CCT&Wattage Selectable
AR09Series	100W 120W 150W	L= 120-277Vac H= 277-480Vac	T3=Type III	PC= Power & CCT selectable "3CCT" can be any alphanumeric for CCT, 3000K/4000K/5000K .

150W & 300W

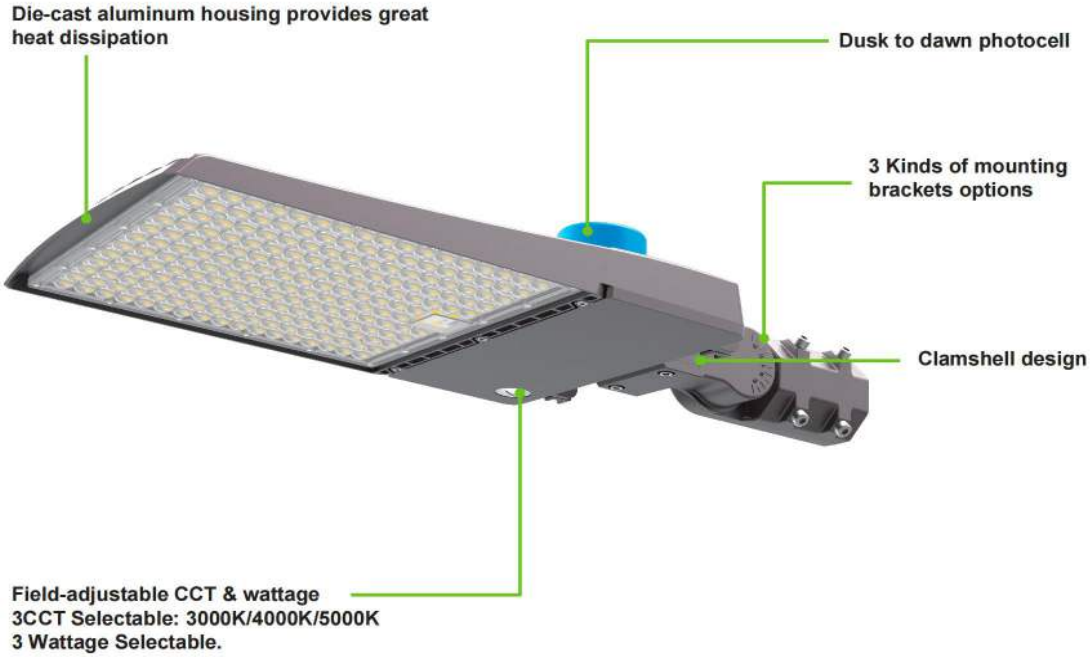

500W

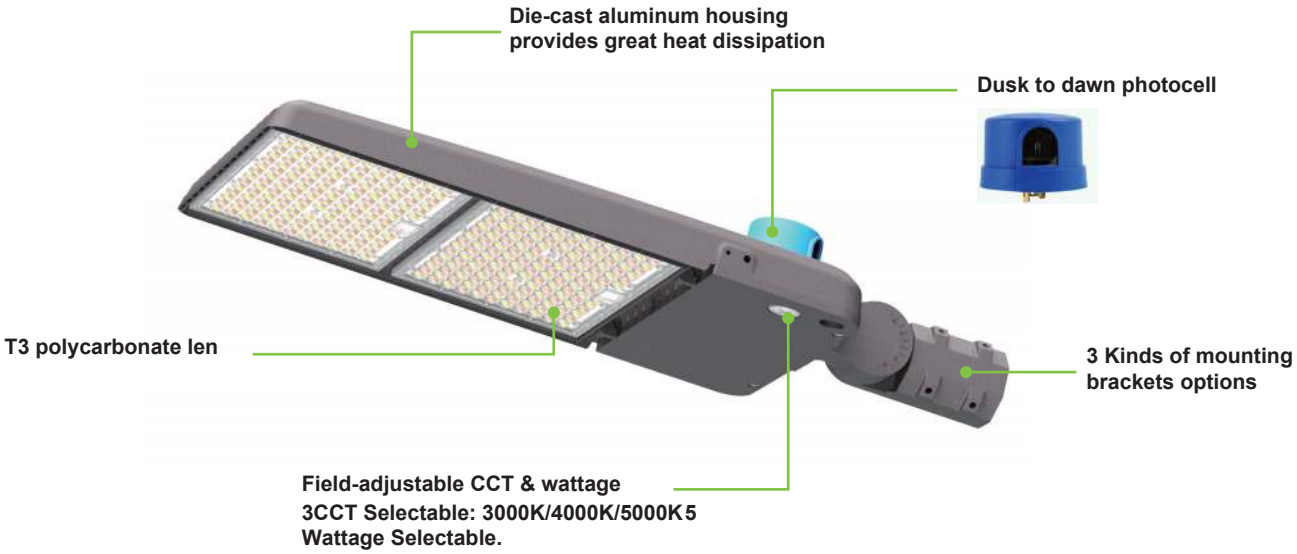

Dimensions

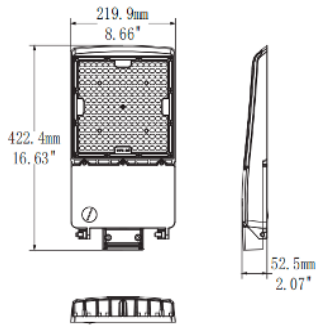

100W/120W/150W

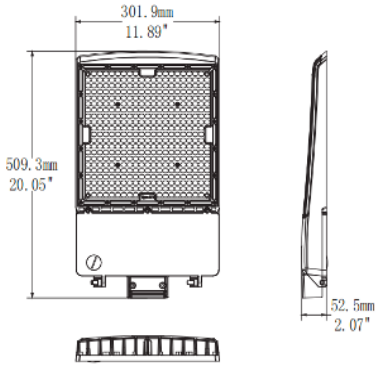

200W/240W/300W

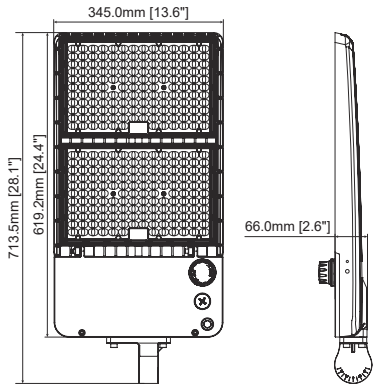

500W

Accessories (Sold Separately)

Photocell

Glare Shield

Mounting Bracket

Slip Fitter (SF)

Direct Mount(DI)

Trunnion Mount(TR)

PHOTOMETRICS

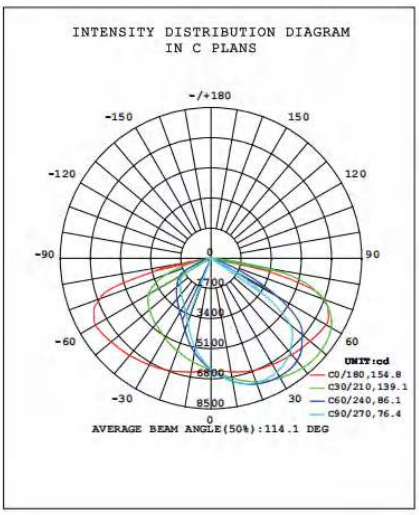

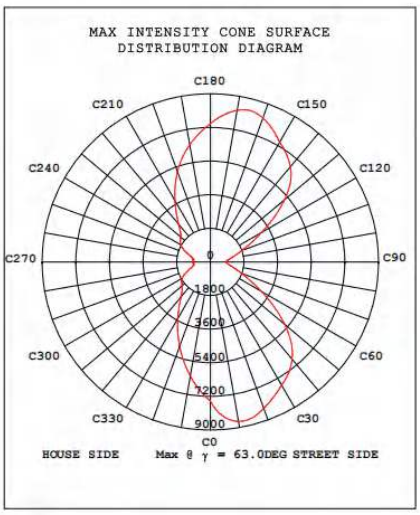

Packing/Weight

Part NO.	Outer Carton Size	Qty/Carton (pcs)	Net weight (lbs)	Gross weight (lbs)
J-AR09-150W	19.1 x 11.1 x 4.5 inches	1	6.2 lbs	7.3 lbs
J-AR09-300W	22.3 x 14.3 x 4.5 inches	1	8.5 lbs	10.1 lbs
J-AR09-500W	27.3 x 17.7 x 5.1 inches	1	15.7 lbs	17.6 lbs